BOLİN TECHNOLOGY

N2-220X NDI Indoor PTZ Camera

User Guide



Contents

Important Information

What's In The Box

Optional Accessories

Recommened Peripherals

Overview

Features

Quick Start Guide

Camera Diagrams & Dimensions

Power Options

Network

Video Output

Web Interface Configuration

- Login
- Liveview
- Fast Settings
- Camera
- Image
- Audio
- Network
- System
- Updating The Firmware
- Operation

System Menus

Important Information

Thank you for purchasing our product. If there are any questions, please contact the authorized dealer.

Before operating the unit, please read this manual thoroughly and retain it for future reference.

Copyright
Copyright 2015-2024 Bolin Technology, all rights reserved. No part of this manual may be copied, reproduced, translated, or distributed in any form or by any means without prior consent in writing from our company.

Trademark Acknowledgment
Bolin Technology's trademarks and logos are the property of Bolin Technology. Other trademarks, company names and product names contained in this manual are the property of their respective owners.

Trademarks and Registered Trademark Acknowledgement
• Microsoft, Windows, ActiveX, and Internet Explorer are registered trademarks of Microsoft Corporation in the U.S. and/or other countries.
• HDMI, the HDMI logo and High-Definition Multimedia Interface are trademarks or registered trademarks of HDMI Licensing, LLC in the United States and other countries.
• The Software may contain h.264/AVC video technology, the use of which requires the following notice from MPEG-LA, L.L.C.:

THIS SOFTWARE IS LICENSED UNDER THE AVC PATENT PORTFOLIO LICENSE FOR THE PERSONAL AND NON-COMMERCIAL USE OF A CONSUMER TO (I) ENCODE VIDEO IN COMPLIANCE WITH THE AVC STANDARD ("AVC VIDEO") AND/OR (II) DECODE AVC VIDEO THAT WAS ENCODED BY A CONSUMER ENGAGED IN A PERSONAL AND NON-COMMERCIAL ACTIVITY AND/OR WAS OBTAINED FROM A VIDEO PROVIDER LICENSED TO PROVIDE AVC VIDEO. NO LICENSE IS GRANTED OR SHALL BE IMPLIED FOR ANY OTHER USE. ADDITIONAL INFORMATION MAY BE OBTAINED FROM MPEG LA, L.L.C. SEE http:// .www.mpegla.com

• HEVC/H.265 Covered by one or more claims of patents listed at patentlist.hevcadvance.com
• HDBaseT is a trademark of the HDBaseT Alliance.
• ONVIF trademarks and logos are to be used per the guidelines established in this and other ONVIF policies and documents, including the ONVIF Rules of Membership and the ONVIF Logo Guidelines1.
• Other trademarks, company names and product names contained in this manual are the property of their respective owners.

Legal Notice

Attention:

To ensure account security, the user should change the password after their first login. The user is recommended to set a strong password (no less than eight characters). Password login does not apply to certain models that do not need password login.

The contents of this document are subject to change without prior notice. Updates will be added to the new version of this manual. Improvements or updates to the products or procedures described in the manual will be made readily.

The best effort has been made to verify the integrity and correctness of the contents in this document, but no statement, information, or recommendation in this manual shall constitute a formal guarantee of any kind, expressed or implied. Responsibility for any technical or typographical errors in this manual will not be held.

The product appearance shown in this manual is for reference only and may be different from the actual appearance of the user's device.

This manual is a guide for multiple product models and so it is not intended for any specific product.

In this manual, the illustrations of the displayed interface, parameters displayed, drawings, and value ranges may vary with models. The user should refer to the actual product for details.

Due to uncertainties such as the physical environment, discrepancies may exist between the actual values and reference values provided in this manual.

Use of this document and the subsequent results shall be entirely on the user's own responsibility.

Before operating the unit, the user should read this manual thoroughly and retain it for future reference.

Symbols

Symbol	Description
	**WARNING** Contains important safety instructions and indicates situations that may cause bodily injury.
	**CAUTION** Users must be careful. Improper operations may cause damage or malfunction of product.
	**NOTE** Indicates useful or supplemental information about the use of the product.

Safety Information

 **WARNING**:

Installation and removal of the unit and its accessories must be carried out by qualified personnel. You must read all of the Safety Instructions supplied with your equipment before installation and operation.

• If the product does not work properly, please contact your dealer. Never attempt to disassemble the camera yourself. (We will not assume any responsibility for problems caused by unauthorized repair or maintenance.)
• This installation should be made by a qualified service person and should conform to all the local codes.
• When shipping, the camera should be packed in its original packaging.
• Make sure the power supply voltage is correct before using the camera.

• Do not drop the camera or subject it to physical shock.
• Do not touch sensor modules with fingers. If cleaning is necessary, use a clean cloth with a bit of ethanol and wipe it gently. If the camera will not be used for an extended period of time, put on the lens cap to protect the sensor from dirt.
• Do not aim the camera lens at the strong light such as sun or incandescent lamp. The strong light can cause fatal damage to the camera.

Maintenance Precautions:

• If there is dust on the front glass surface, remove the dust gently using an oil-free brush or a rubber dust blowing ball.
• If there is grease or a dust stain on the front glass surface, clean the glass surface gently from the center outward using anti-static gloves or an oil-free cloth. If the grease or the stain still cannot be removed, use anti-static gloves or an oil-free cloth dipped with detergent and clean the glass surface gently until it is removed.
• Do not use organic solvents, such as benzene or ethanol, when cleaning the front glass surface.

Regulatory Compliance

FCC Part 15

This equipment has been tested and found to comply with the limits for digital devices, pursuant to part 15 of the FCC Rules. These limits are designed to provide reasonable protection against harmful interference when the equipment is operated in a commercial environment. This equipment generates, uses, and can radiate radio frequency energy and, if not installed and used in accordance with the instruction manual, may cause harmful interference to radio communications. Operation of this equipment in a residential area is likely to cause harmful interference, in which case the user will be required to correct the interference at his own expense.

This product complies with Part 15 of the FCC Rules. Operation is subject to the following two conditions:

This device may not cause harmful interference.

This device must accept any interference received, including interference that may cause undesired operation.

CE	**LVD/EMC Directive** This product complies with the European Low Voltage Directive 2006/95/EC and EMC Directive 2004/108/EC.
	WEEE Directive–2002/96/EC The product this manual refers to is covered by the Waste Electrical & Electronic Equipment (WEEE) Directive and must be disposed of in a responsible manner.

What's In The Box

	N2 Series Indoor PTZ Camera (N2-220X)
	IR Remote Controller (VCC-RC-2)
	**USB to 3.5mm Audio Jack Adapter (VCC-UA35IO)**
	RS422/232 RJ45 Adapter (VCC-CC45RS)

	**12V, 4A Power Supply with International Plugs (P12-2)**
	**Lens Cap**

Optional Accessories

	**Small PTZ Wall Mount Bracket - Available in Black or White (C-WM1B or C-WM1W)**
	**PTZ Camera Pendant Mount System for Drop Ceiling - Black or White (C-PMSB or C-PMSW)**
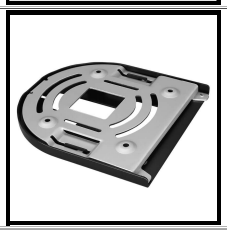	**Camera Ceiling Mount Bracket - Available in Black or White (VCC-CM or VCC-CM/W)**

Recommended Peripherals

	**PTZ Controller (KBD-1010-RNV)**
	**Fast HEVC IP Decoder (EG40F)** **Dante AV-H Decoder (EG40DH)**

Overview

This user guide will provide users of the N2-220X indoor PTZ cameras with in-depth knowledge of the various features and functions of the camera and how it can be utilized. Functions limited to a specific camera model will be noted as such in the various sections.

Features

- Sony 1/2.8 Inch CMOS sensor, Effective pixel number: 2.13 Megapixels.
- Resolution: Up to 1920×1080p60/50/30/25fps.
- Color Space supports YUV (YCbCr) and RGB.
- IP Resolution: Up to 1080P60.
- 20X optical and 16X digital zoom.
- 3G-SDI video output
- HDMI1.4 -Type A and USB 2.0 - Type C.
- On screen display (OSD), WDR On/Off, Day/Night mode On/Off, Contrast, Color Hue, Gamma (0 to 4) and High Sensitivity.
- Auto and Manual Exposure, Shutter / Day/NIght / Brightness priority.
- Focus Zone: Face Priority, All Area, Upper Area, Central Area and Lower Area
- AI Face Detection for Focus and Exposure.
- 2D and 3D Noise Reduction (1-255).
- Four PTZ Trace Memory supported via IP interface, Noise Reduction and Tally Light.
- Video Output: HDMI 1.4 and IP stream simultaneously.
- ±175 degrees continuous pan, +90 degrees to -30 degrees continuous tilt.
- 255 presets, Speed up to 150°/S, accuracy: 0.05° with 6 presets on remote control.
- Standard mounting and ceiling mounting with E-Flip function.
- Control via RS-422(RJ45 x1) IP controls (RJ45 x1) and IR Remote Control.
- Image parameter setting restore with presets and quick access operation.
- Audio USB port to 3.5mm audio jack (The included USB to 3.5mm jack adapter is required for use).
- Power: DC 12V, PoE+ (IEEE802.3at).
- Firmware upgrade via USB2.0 or web interface.
- Supports NDI® HX3 and are fully compatible with NDI-enabled hardware and software.

Camera Diagrams and Dimensions

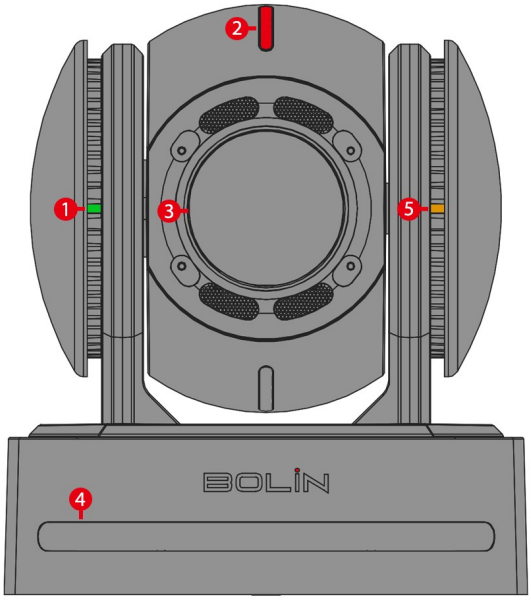

1. Power Light
2. Tally Light
3. Camera Lens
4. IR Sensor
5. Activity Light

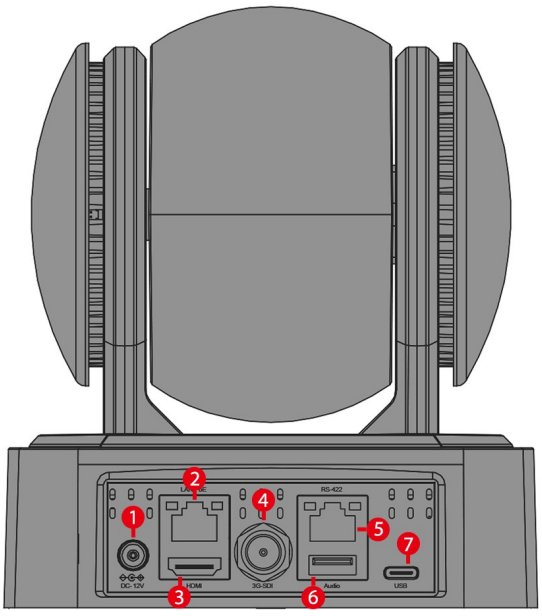

1. DC 12V Power Input
2. LAN/PoE+ Ethernet Port
3. HDMI 1.4 Port
4. 3G SDI
5. RS422/ RS485 Control Port
6. Audio USB Port (Use only with supplied adapter)
7. USB 2.0 Type-C Output Port

NOTE: All dimensions listed below are in millimeters.

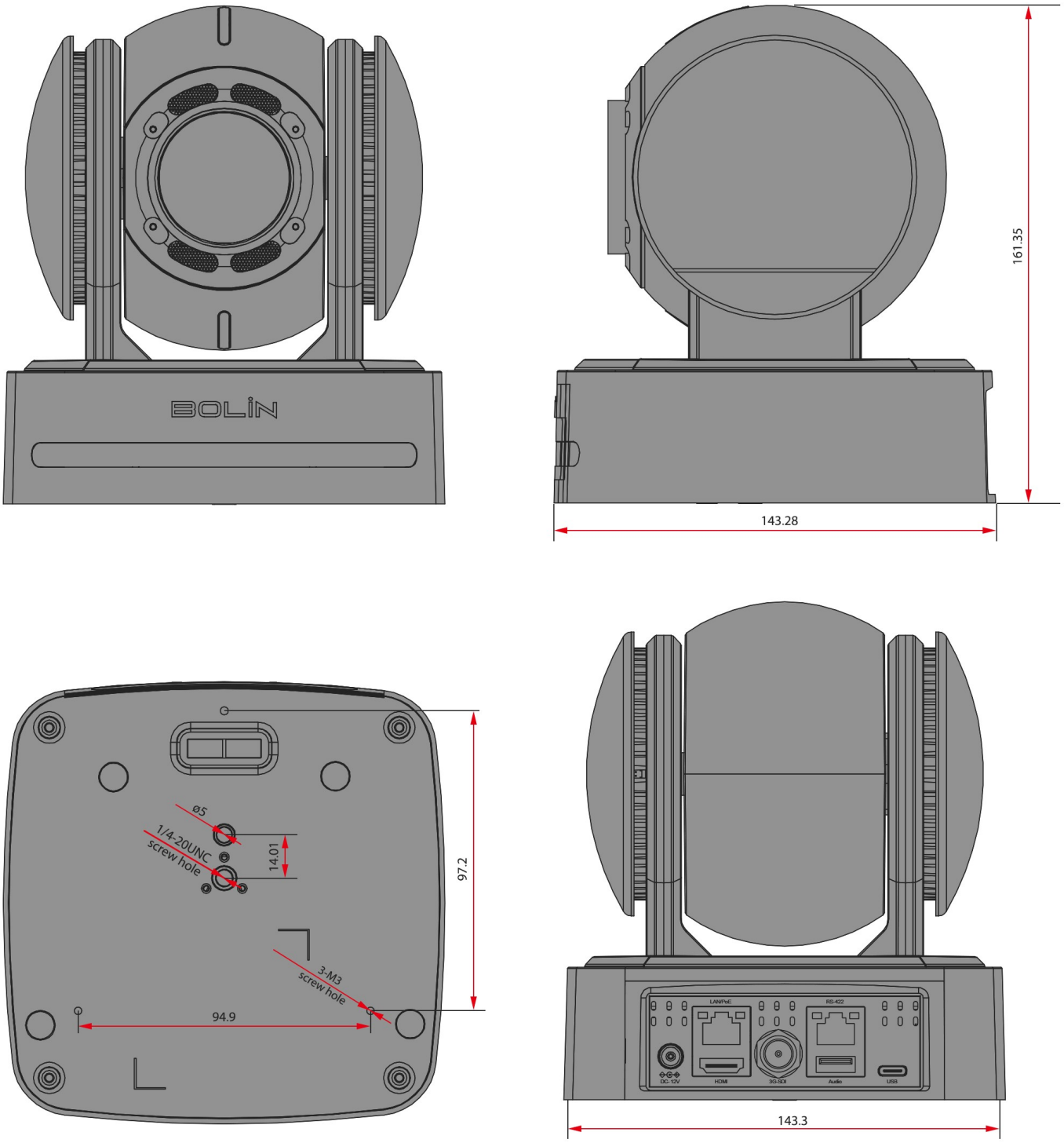

Quick Start Guide

The N2-220X Indoor PTZ Camera has multiple connection options for video output, power input, control input, audio input and output, and synchronization. You can choose the appropriate connection points based on your requirements. Supports NDI® HX3 and are fully compatible with NDI-enabled hardware and software.

Power Options

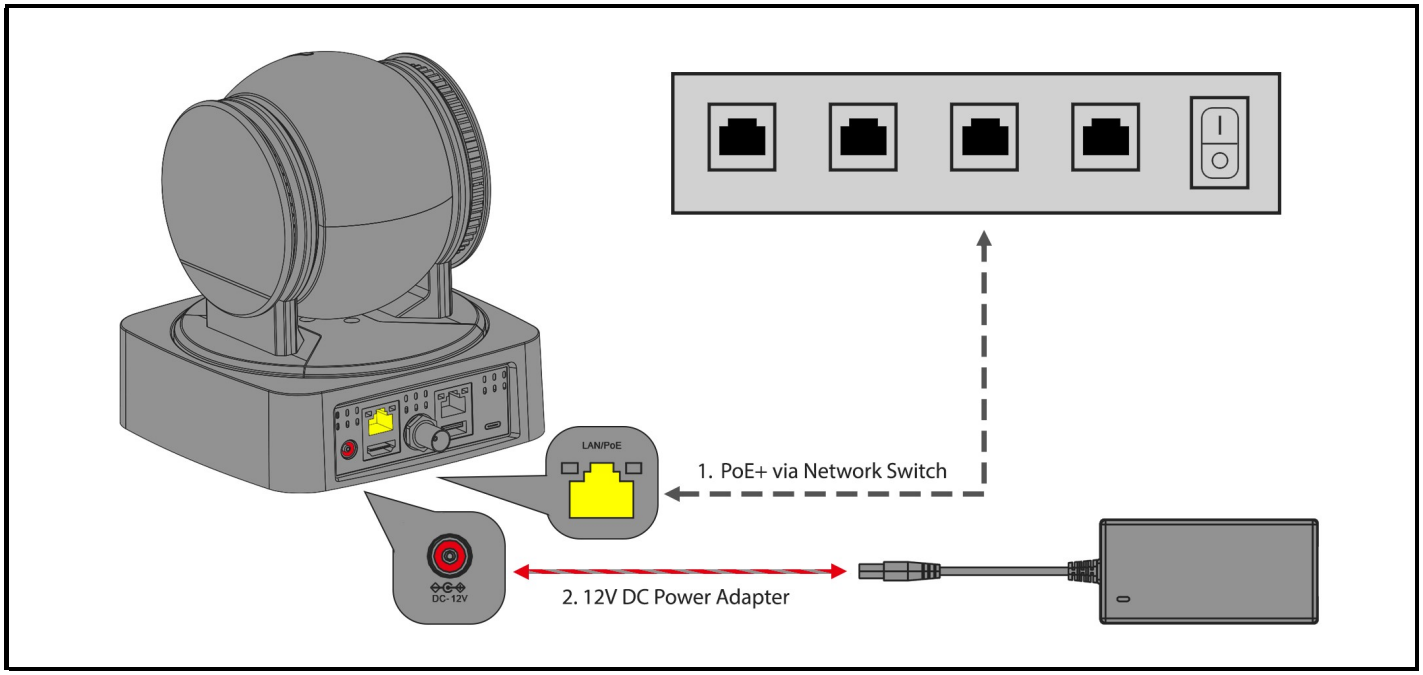

- Use only the 12V DC power adapter (JEITA type4) provided with the unit. (Do not use any other DC power adapter.)
- POE+ (IEEE802.3at) is supported for powering the camera.

NOTE: Verify that the POE+ power source is sufficient for the camera's full operation. The camera will auto-pan, tilt, and scan upon DC power connection.

Network

This camera offers a variety of functionalities via a network connection. Besides being powered over Ethernet, a network connection enables the user to adjust camera settings remotely, stream video from the camera to a distant location, and control the PTZ camera functions via the Web Interface. To connect the camera to the network, the user should adhere to the following steps:

1. Acquire a standard Category (CAT) 6 cable and insert one end of the cable into the camera. Connect the other end to a network switch.
2. Power on the camera.
3. To retrieve the IP address of the camera, the user should open the OSD Menu and navigate to the Status section. Alternatively, the user can download Bolin's IPC search tool from the website (www.bolintechnology.com) onto a Windows computer and execute the tool to locate the camera on the network.
4. The user should ensure that their camera and computer are on the same subnet of the network to gain access to the Web Interface.

NOTE: Factory-Default Camera Network Settings:

Static IP Address: 192.168.0.13
Subnet Mask: 255.255.255.0
Gateway: 192.168.0.1

To change these settings, refer to the Web Interface Configuration section of this guide.

Video Output

The camera has the capability to output HDMI/3G-SDI and IP video at the same time. Additionally, the SDI and IP ports have the flexibility to output two distinct video formats.

HDMI Out (HDMI 1.4)

The user should follow these steps to connect the camera:

1. Connect one end of an HDMI cable that supports the required resolution to the HDMI Output of the camera. Connect the other end of the HDMI cable to the desired destination (Switcher, Converter, Display, etc.).
2. Power on the camera and wait for it to initialize. Once initialized, video will appear on the screen. For the first five seconds, the camera's initial settings will be displayed.
3. The user can utilize the OSD (On-Screen Display) Menu or Web Interface to set the desired output resolution and frame rate. For more information on how to configure these settings, please refer to the Web Interface Configuration and System Menu section of this guide.

NOTE: It is recommended for the user to utilize a certified "Premium High Speed HDMI" cable to guarantee the attainment of the maximum signal quality from their camera.

HDMI Standard Classifications

HDMI Standard	Bandwidth	Max Resolution Supported
HDMI 1.4	10.2 Gigabit/Second	1080p, 120 Hz 4K, 30 Hz

HDMI 2.0	18.0 Gigabit/Second	4K, 60 Hz
HDMI 2.1	48.0 Gigabit/Second	8K, 120 Hz

Dual SDI Out (3G-SDI)

1. Connect one end of an appropriately rated SDI cable to the SDI output on the camera. Ensure to secure the BNC connector in place to prevent the cable from becoming loose during use. Connect the other end of the SDI cable to the desired destination (Switcher, Video Router, Converter, Display, etc.).
2. Power on the camera and wait for it to initialize. Once initialized, video will appear on the screen. For the first five seconds, the camera's initial settings will be displayed.
3. The user can utilize the OSD (On-Screen Display) Menu or Web Interface to set the desired output resolution and frame rate. For more information on how to configure these settings, please refer to the Web Interface Configuration and System Menu section of this guide.

NOTE: The SDI Output labeled as "Program Out" or "P/G Out" will only display the video and not any OSD Menu's or overlays.

SDI Standard Classifications

SDI Standard	Bandwidth	Resolution Supported
SD-SDI	270 Megabits/Second	480i
HD-SDI	1.485 Gigabit/Second	720p / 1080i
3G-SDI	2.970 Gigabit/Second	1080P, 60FPS
6G-SDI	6 Gigabit/Second	4K, 30FPS
12-SDI	12 Gigabit/Second	4K, 60FPS

IP Stream Out

The IP stream(s) can be enabled and configured from the Web Interface of the camera. The camera must be connected to a Local Area Network (LAN) using a CAT6 cable through either a switch or direct connection to a computer in order to access the web interface. Streaming from the camera requires internet (WAN) access. The following steps should be followed:

1. Connect the camera to the network by inserting one end of a CAT6 cable into the 10/100/1000 LAN port of the camera and the other end either into a switch or directly into a computer.
2. Open an HTML5-enabled web browser on a computer and enter the IP address of the camera. By default, the camera is set to 192.168.0.13. The IP address can also be located under the "Status" menu of the camera's On-Screen Display (OSD) or by using Bolin Technology's IPC Search Tool in the Download Center.
3. Select "AV Setup" from the menu on the left-side of the Web Interface. From here, enable and configure the IP streams as needed. For more details, refer to the "Web Interface Configuration" section of this user guide.

Control Input

The B2-220 has multiple ways of being controlled that can be used simultaneously to provide the user with the flexibility they need for their setup. The control methods are as follows :

Infrared (IR) Remote Controller

The IR remote included with the device is capable of controlling up to 3 unique IR channels. IR channels can be set with the toggle switch on the back of the camera or through the Web Interface.

The remote is designed to function optimally from short distances and requires a line-of-sight with the camera. The I/O panel of the camera incorporates an IR receiver to accept commands from the remote. To use the IR Controller, the following steps are recommended:

1. Before powering on the camera, the desired IR channel should be selected using the IR Channel Selector located on the back of the camera. Channels 1-3 are available for selection. If multiple cameras are in use, it is advisable to assign different IR channels to cameras that are in close proximity to each other to prevent unintended changes.
2. Once the channel has been selected, the camera should be powered on.
3. On the IR remote, the "Camera IR ID" that corresponds with the selected channel on the camera should be chosen. The remote is now ready to be used to configure or control the camera.

NOTE: When you're using the IR Remote, make sure to either power off any nearby cameras or set them to a different IR ID. If there are cameras within range that are set to the same IR ID, their settings might be altered.

Functions of the IR Controller:

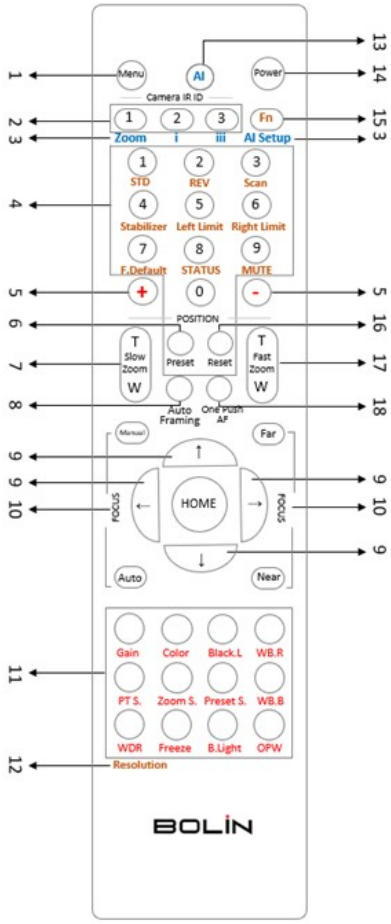

1. **Menu** - On-Screen Display (OSD) Toggle
2. **IR ID Selector** - Select which IR Channel (Camera) to be controlled
3. **AI Function Buttons** - Disabled
4. **Buttons 1-9** - Used to set & recall corresponding presets. (See #6 to set a preset and #16 to erase a preset)
5. **+ & - Buttons** - Used in conjunction with image adjustment buttons (11) to increase or decrease parameters.
6. **Preset** - To save a preset, hold down the "Preset" button and the preset number you would like to assign it to.
7. **Slow Zoom** - Zoom's the camera in or out in a slow speed.
8. **Auto Framing** - Disabled
9. **Direction Arrows** - Pan and Tilt the camera in the corresponding direction. Navigate the OSD Menu when open.
10. **Focus Adjustments** - Use the "Auto" button to enable auto-focus. To make manual focus adjustments, press the "Manual" button first, followed by the "Far" or "Near" buttons to adjust.
11. **Image Adjustments** - Select the property you would like to adjust, followed by the + and - buttons (5) to make the appropriate adjustment, unless otherwise noted below. The selected function and corresponding options will glow when selected.
    - ***Gain*** - Image gain settings
    - ***Color*** - Color saturation settings
    - ***Black.L*** - Image black level settings
    - ***WB.R*** - White Balance, Red settings
    - ***PT.S*** - Pan/Tilt speed settings
    - ***Zoom.S*** - Zoom speed settings
    - ***Preset.S*** - Preset speed settings
    - ***WB.B*** - White Balance, Blue settings
    - ***WDR*** - Wide Dynamic Range Settings
    - ***Freeze*** - Freeze the video on the current frame. (Doesn't use + and - buttons)
    - ***B.Light*** - Back light compensation
    - ***OPW*** - One Push White Balance (Hold the button down while pointing the camera at a gray card to set white balance.)
12. **Resolution** - Used to change the video format/resolution. Press and hold the Fn button (15) and Resolution button to select the desired format. The image block will restart after the format is changed, and the screen will go black for a few seconds.
13. **AI Button** - Disabled
14. **Power** - Press and hold for three seconds to turn the camera on/off.
15. **Fn Button** - Press and hold in conjunction with other buttons in dark brown text (Stabilizer, Mute, Scan, etc...) to adjust parameters.

VISCA Over IP, Color, Video Format, and IR ID Dip Switch Settings:

SW2

1	2	3	4	5	6	7	8	ON / OFF

B1	B2	B3	B4	Video Resolution
OFF	OFF	OFF	ON	1080p60
OFF	OFF	ON	OFF	1080p59.94
OFF	OFF	ON	ON	1080p50
OFF	ON	OFF	OFF	1080p30
OFF	ON	OFF	ON	1080p29.97
OFF	ON	ON	OFF	1080p25
OFF	ON	ON	ON	Empty
ON	OFF	OFF	OFF	Empty
ON	OFF	OFF	ON	Empty
ON	OFF	ON	OFF	Empty
ON	OFF	ON	ON	Empty
ON	ON	OFF	OFF	720p6c
ON	ON	OFF	ON	720p59.94
ON	ON	ON	OFF	720p50
ON	ON	ON	ON	720p30

B7	B8	IR Address
OFF	OFF	OFF
ON	ON	ON
OFF	OFF	OFF

(B2 bottom view)

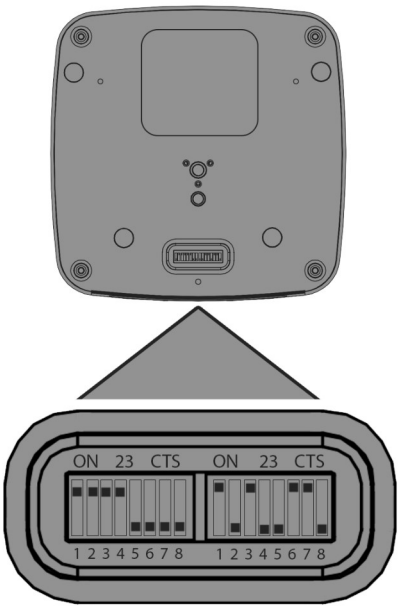

SW1

1	2	3	4	5	6	7	8	ON / OFF

1-3: Visca Address

ADD	1	2	3
Auto	OFF	OFF	OFF
1	ON	OFF	OFF
2	OFF	ON	OFF
3	ON	ON	OFF
4	OFF	OFF	ON
5	ON	OFF	ON
6	OFF	ON	ON
7	ON	ON	ON

4:	RGB	ON	
	YUV	OFF	
5:	Empty		
6:	R2-232	OFF	
	RS-422	ON	
7-8:	2400Bps	OFF	OFF
	4800Bps	ON	OFF
	9600Bps	OFF	ON
	38400Bps	ON	ON

SW2

B2-B4: Video format of the camera
B7 & B8: Remote ID
Both video format and IR remote ID can be adjusted via the OSD menu. The last changes made will override any previous settings.

SW1

1-3: Are OFF, the address is assigned automatically (up to 7 devices).
4: Video color space output.
6: RS-232 – RS-422 selection.
7-8: RS-232/RS-422 baud rate setting.

NOTE: Any DIP Switch changes should be done with the camera off.

RS-422 Serial Commands (VISCA)

The camera is equipped with an RS-422 port, which facilitates VISCA control over serial commands. This RS-422 port is also compatible with RS-485. The camera can be connected via a serial connection to a PTZ controller or a computer. This allows for the execution of pan, tilt, and zoom operations, as well as the performance of preset recalls.

CAUTION: When one connects the camera via serial to a Sony PTZ controller, it differs from the process with a non-Sony PTZ controller. It is crucial to verify the pin settings for the specific controller in use.

1. The camera should be powered on, and the OSD menu should be opened or the Web Interface should be logged into using any web browser. Proceed to the system settings and adjust the baud rate to match that of the controller. The VISCA ID should be set to a number between 1 and 7.
2.

   A standard terminated CAT5 or CAT6 cable can be used to directly connect the camera to the controller. Alternatively, the included RJ45 to RS422 Control Cable Adapter can be used to connect unterminated CAT5/CAT6 cables between the camera and controller. The pin connection diagrams provided below should be followed, taking into account the specific controller in use and the desired connection.

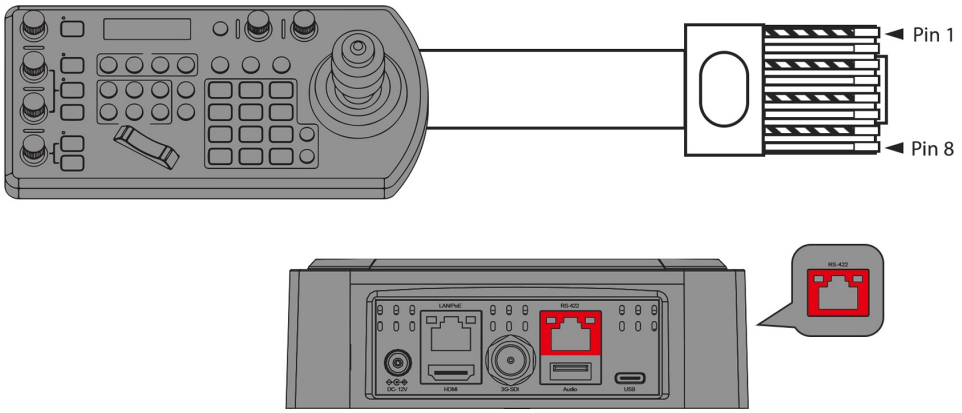

1	RX-	Orange/White
2	RX+	Orange
3	GND	Green/White
4	-	Blue
5	-	Blue/White
6	-	Green
7	TX-	Brown/White
8	TX+	Brown

NOTE: Please refer to the KBD-1010-RNV user guide for instructions on how to establish an RS422 connection with the controller.

Use RS-422 (VISCA) / RS485 (PELCO P/D)

For camera operations, the RS-422/485 port can be utilized to connect controllers, such as a joystick keyboard or a PC station. This allows for the effortless management of pan, tilt, and zoom functions, as well as access to all preset functions using the controller's buttons.

To operate a PC station, it is essential to have a software application that is compatible with this unit.

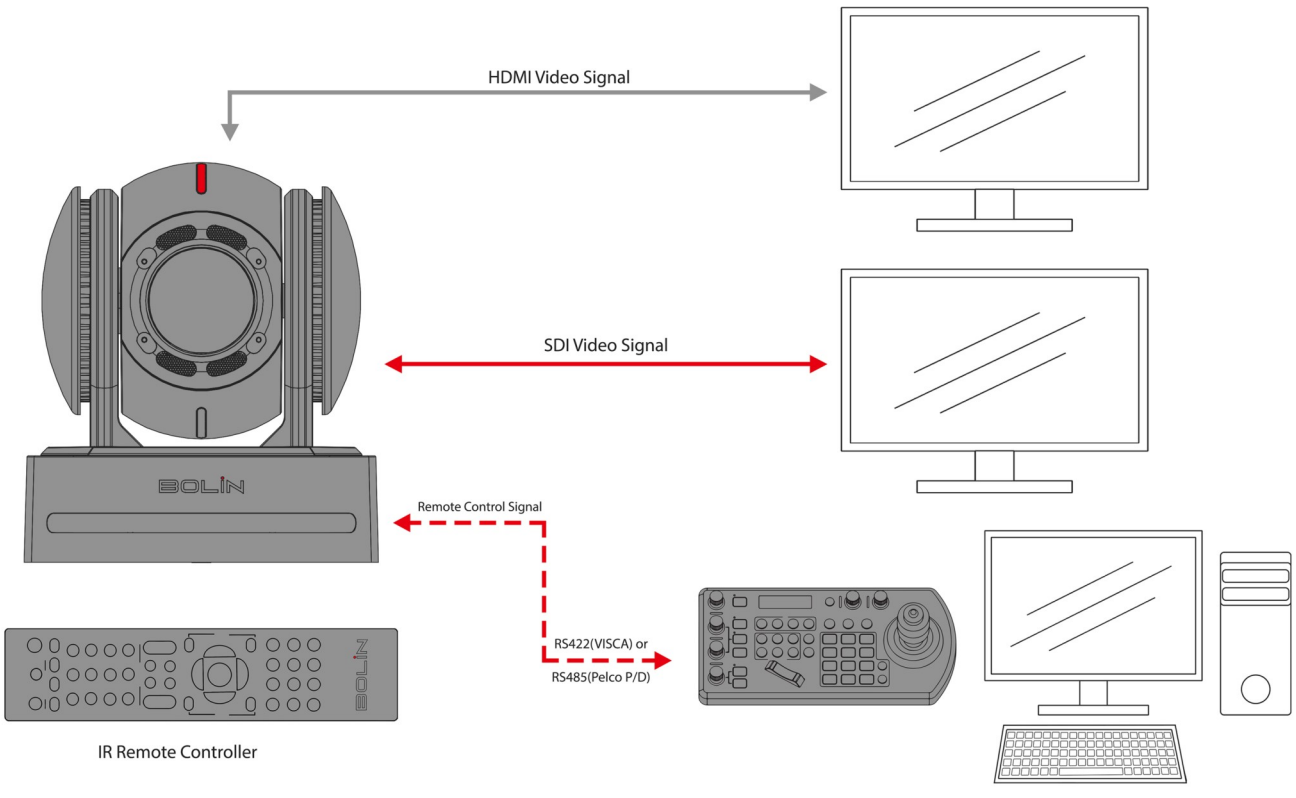

SONY Keyboard RS422 Connection
Guide for Establishing RS422 Connection and Daisy Chain Configuration for Multiple Cameras with a SONY Controller.

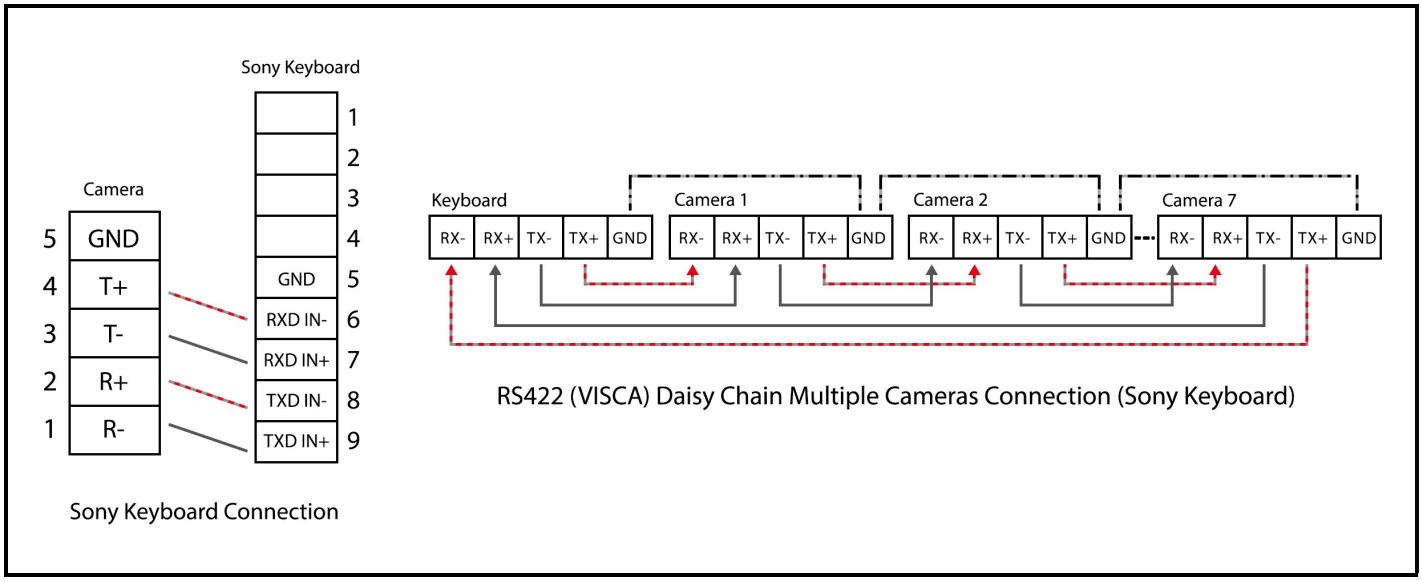

VISCA (Non-Sony) Keyboard RS422 Connection
Guide for Establishing RS422 Connection and Daisy Chain Configuration for Multiple Cameras with a Non-Sony Controller:

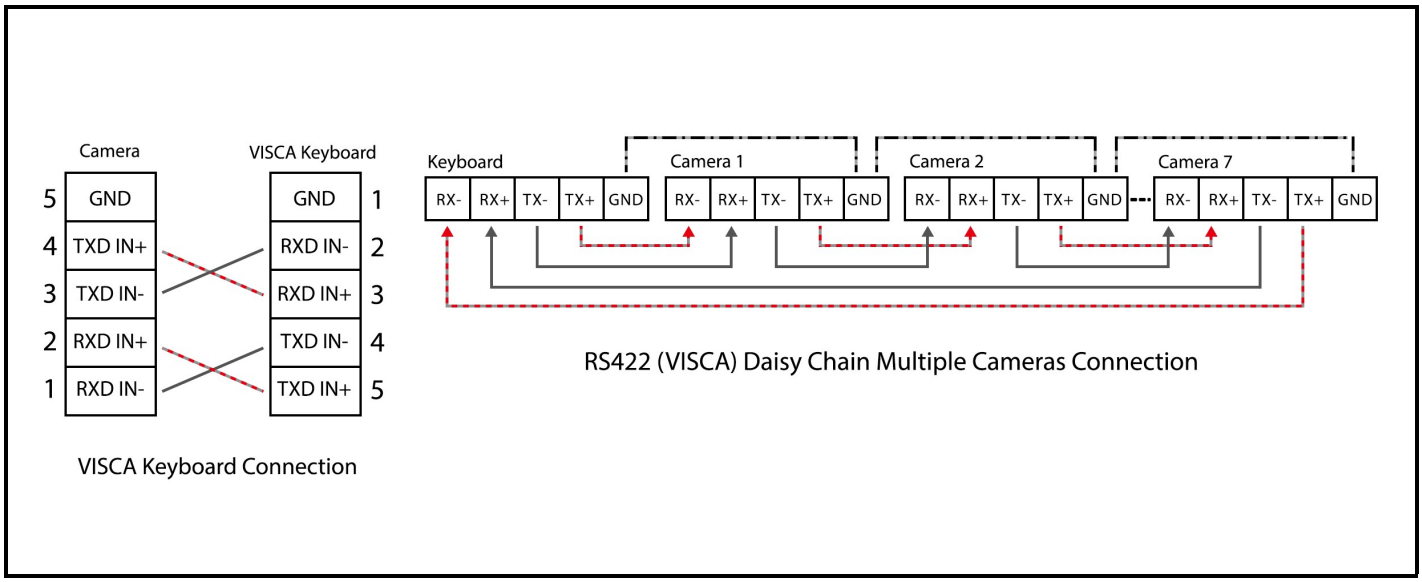

The included extension cables, along with the RJ45 to RS422 Phoenix connector adapter, should be utilized to establish an RS422 connection for the control device.

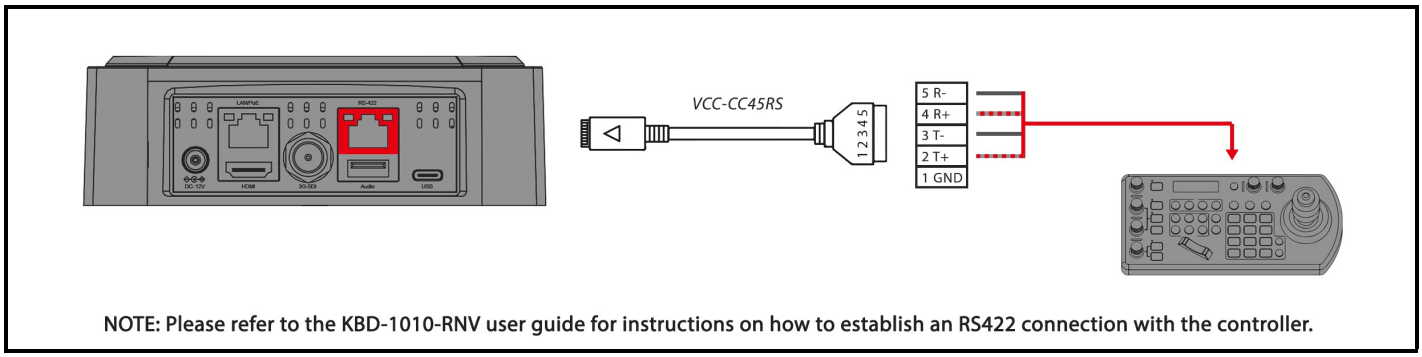

Guide to creating an RS422 Daisy Chain Connection for Multiple Cameras with an RS422 Standard Serial Port Controller.

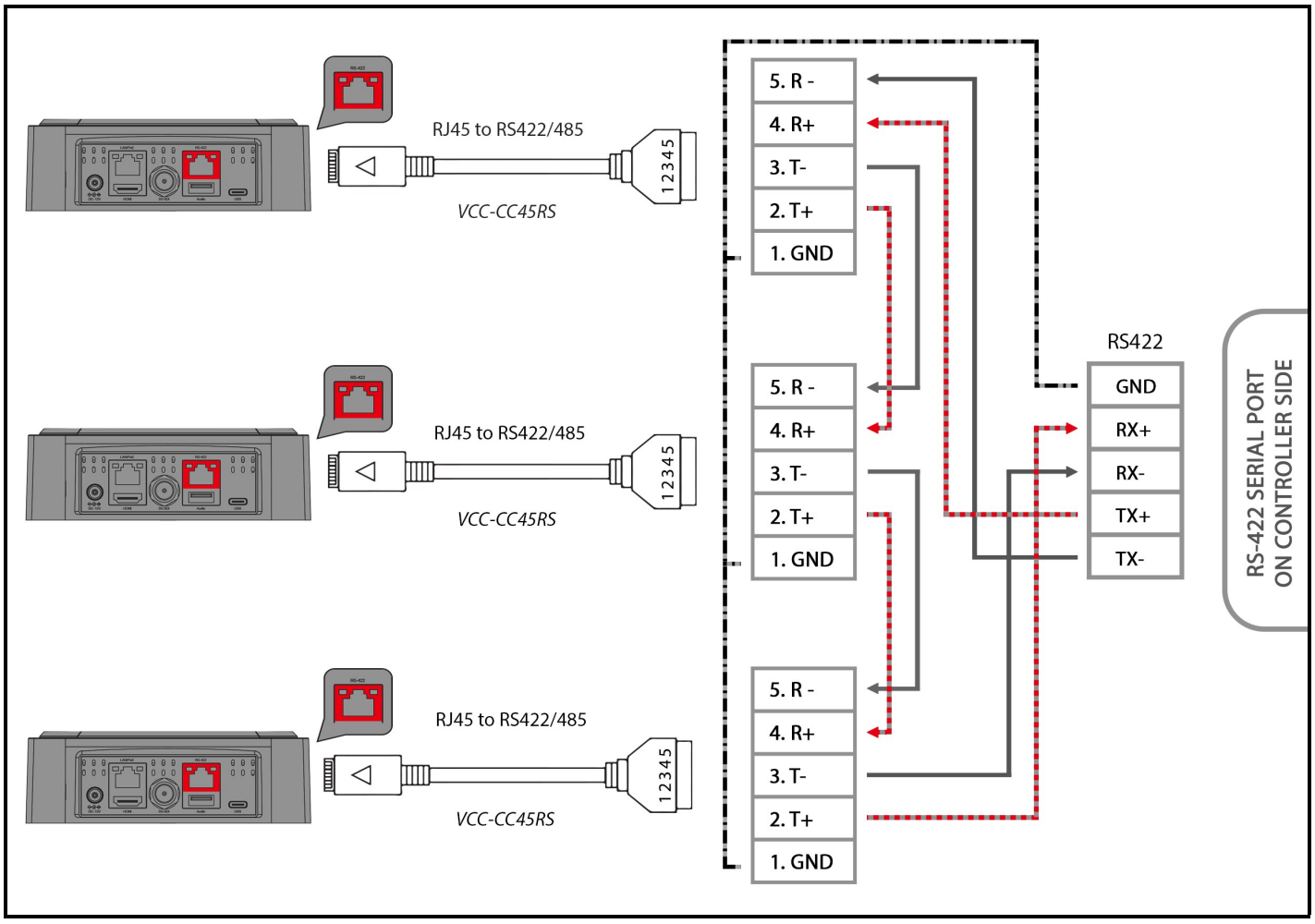

PELCO P/D Keyboard RS485 Connection
Important: Utilize RS422 ports when establishing an RS485 connection. Only employ TX+ and TX- for RS485 connections.

• Set the RS422 control method using the OSD menu or Web interface.
• Set the camera ID on the OSD menu using the remote controller.

• To ensure the settings have been applied, restart the camera by switching it off and then back on.
• Use a PELCO P/D compatible keyboard for seamless integration.
• Utilize preset # 95 on the keyboard to access/exit the camera OSD menu.
• Navigate the OSD menu using the joystick and buttons "OPEN" or "CLOSE."
• For the keyboard operation details, refer to the user manual of the specific keyboard in use.

PELCO RS485 Connection

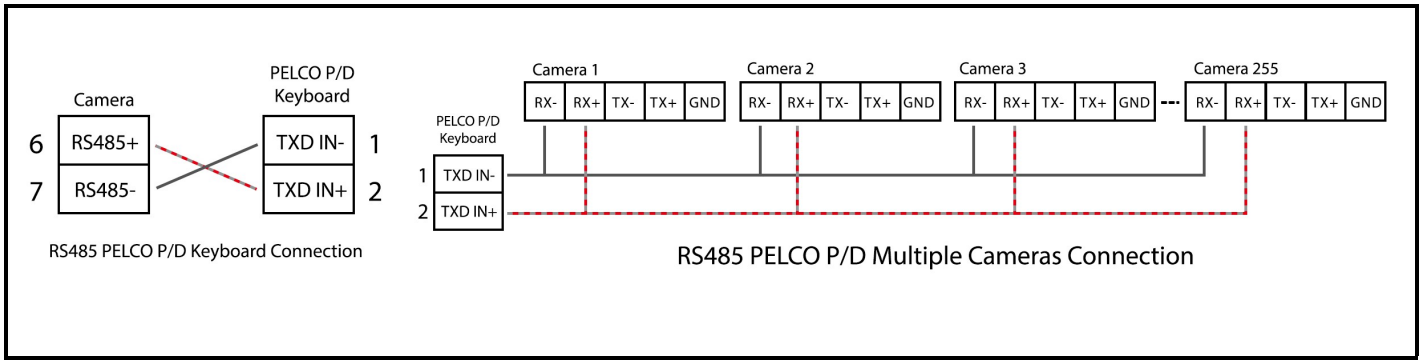

Utilize extension cables that come with an RJ45 to RS422 Phoenix connector adapter to establish an RS485 connection for your control device.

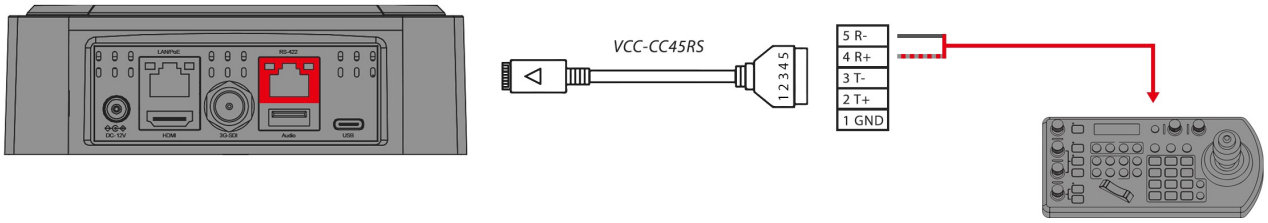

NOTE: Please refer to the KBD-1010-RNV user guide for instructions on how to establish an RS422 connection with the controller.

The extension cables that are provided, along with the RJ45 to RS422 Phoenix connector adapter, should be utilized to establish an RS422 connection for the control device.

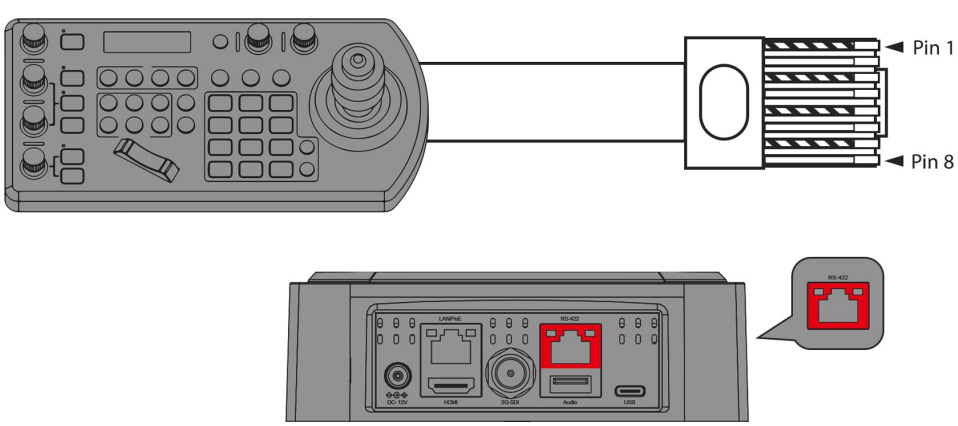

1	RX-	Orange/White
2	RX+	Orange
3	GND	Green/White
4	-	Blue
5	-	Blue/White
6	-	Green
7	TX-	Brown/White
8	TX+	Brown

NOTE: Please refer to the KBD-1010-RNV user guide for instructions on how to establish an RS422 connection with the controller.

Alternatively, you can establish an RS485 connection by directly connecting the camera and the controller using a CAT5/6 T-568B Standard Ethernet cable.

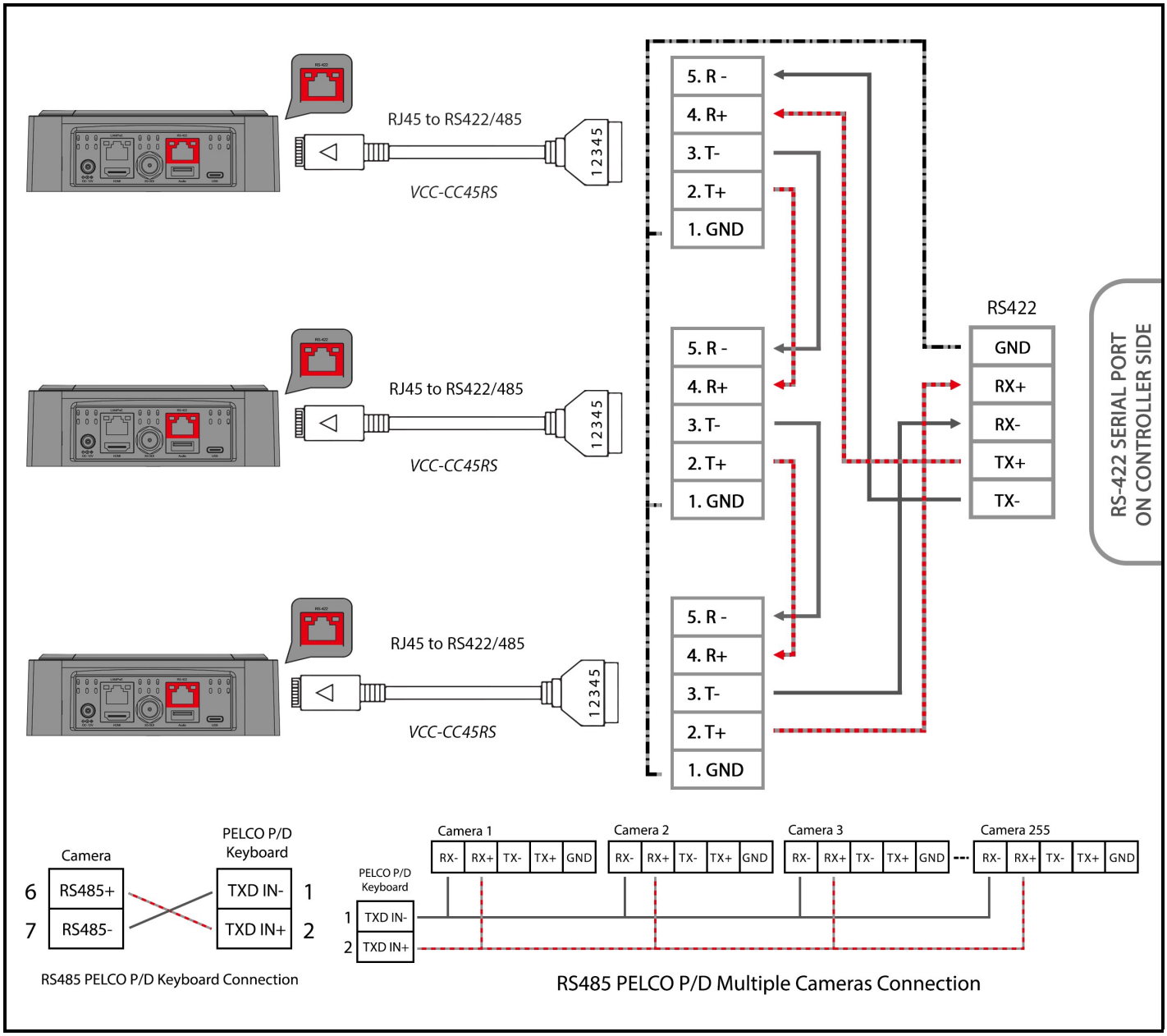

VISCA over IP

Using VISCA over IP allows users to control the camera from anywhere that is on the same LAN as the camera. It involves connecting the PTZ camera to a network switch. The steps are as follows:

1. Connect the camera to the network by inserting one end of a CAT6 cable into the 10/100/1000 LAN port of the camera and the other end into a network switch.
2. Configure the camera's IP address and related network settings to properly communicate with your network and PTZ Controller.
3. Connect a PTZ Controller that supports VISCA over IP to the network with a CAT6 cable.
4. Configure the controller's IP address and related network settings to properly communicate with your network and PTZ camera. Then enter the camera's IP address and VISCA over IP port settings into the controller to access the camera.

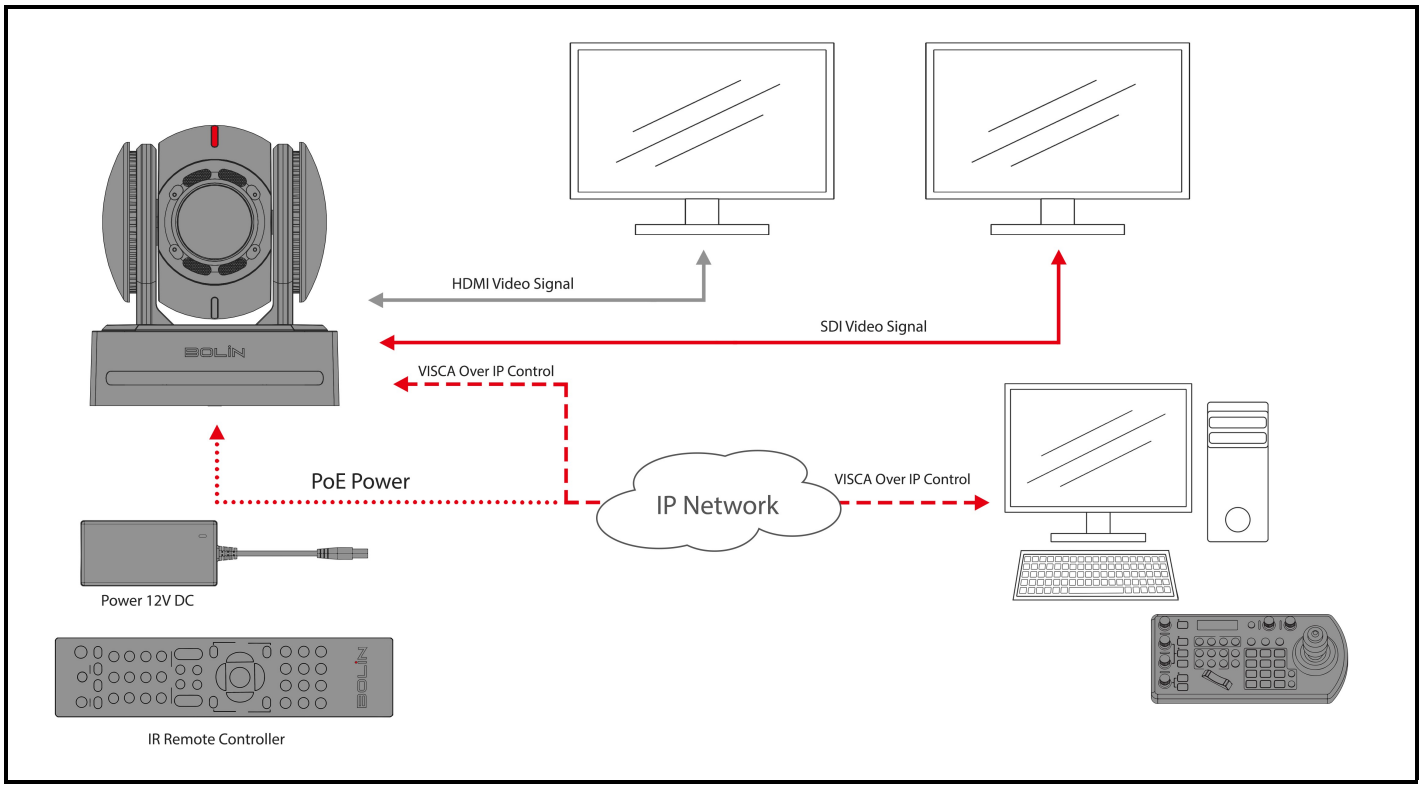

NOTE: Factory-Default Camera Settings for control of VISCA over IP
Static IP Address: 192.168.0.13
Subnet Mask: 255.255.255.0
Gateway: 192.168.0.1
VISCA over IP Control Port: 52381

To change these settings, refer to the Web Interface Configuration section of this guide.

NOTE: The VISCA over IP port of the controller MUST be set to 52381 to communicate with and control the camera.

ONVIF Protocol

Can be easily integrated with other ONVIF compliant devices and systems. This allows for greater flexibility and ease of use, especially with setups that involve multiple devices and systems.

ONVIF 2.4 (Profile S/G/T)

ONVIF Port: 2000

Audio Input

HDMI/SDI/USB and IP video streaming signal has high–quality audio streaming embedded with support for Mic-in and Line-in audio input.

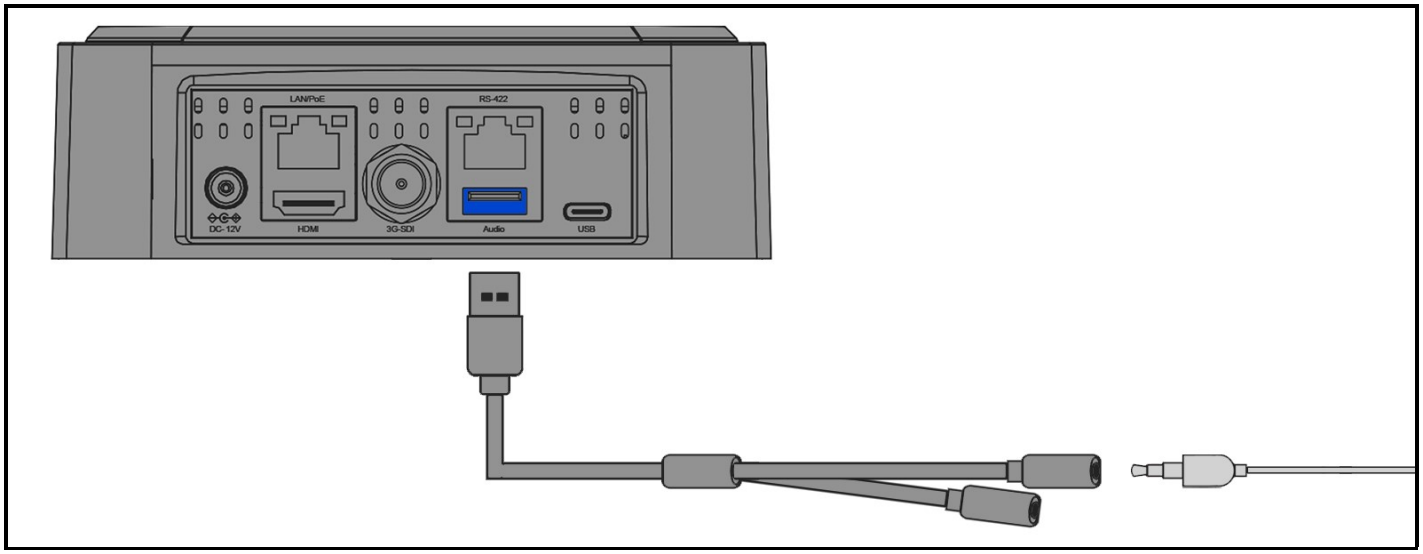

NOTE: the audio USB port is specifically designed to be used with a USB to audio jack adapter only.

Tally Light

Tally Light GPI I/O connection

The camera is equipped with two tally lights, serving as visual indicators. When illuminated, these lights signal that the camera is actively operational. One front Tally light improves visibility, and an additional tally light positioned behind the camera block improves rear visibility. To activate the camera's Tally Light function, you need a video switch and a keyboard (not included).

GPI connection with RS422 VISCA control connection
Cable Configuration:
1. Set up a standardized RS-422 daisy chain control connection to seamlessly control multiple cameras from the keyboard controller. (For detailed RS422 control information, refer to the Keyboard Controller user guide.)
2. Established a Tally/Contact Function cable connection between the Keyboard Controller and the Video Switcher (Sony).

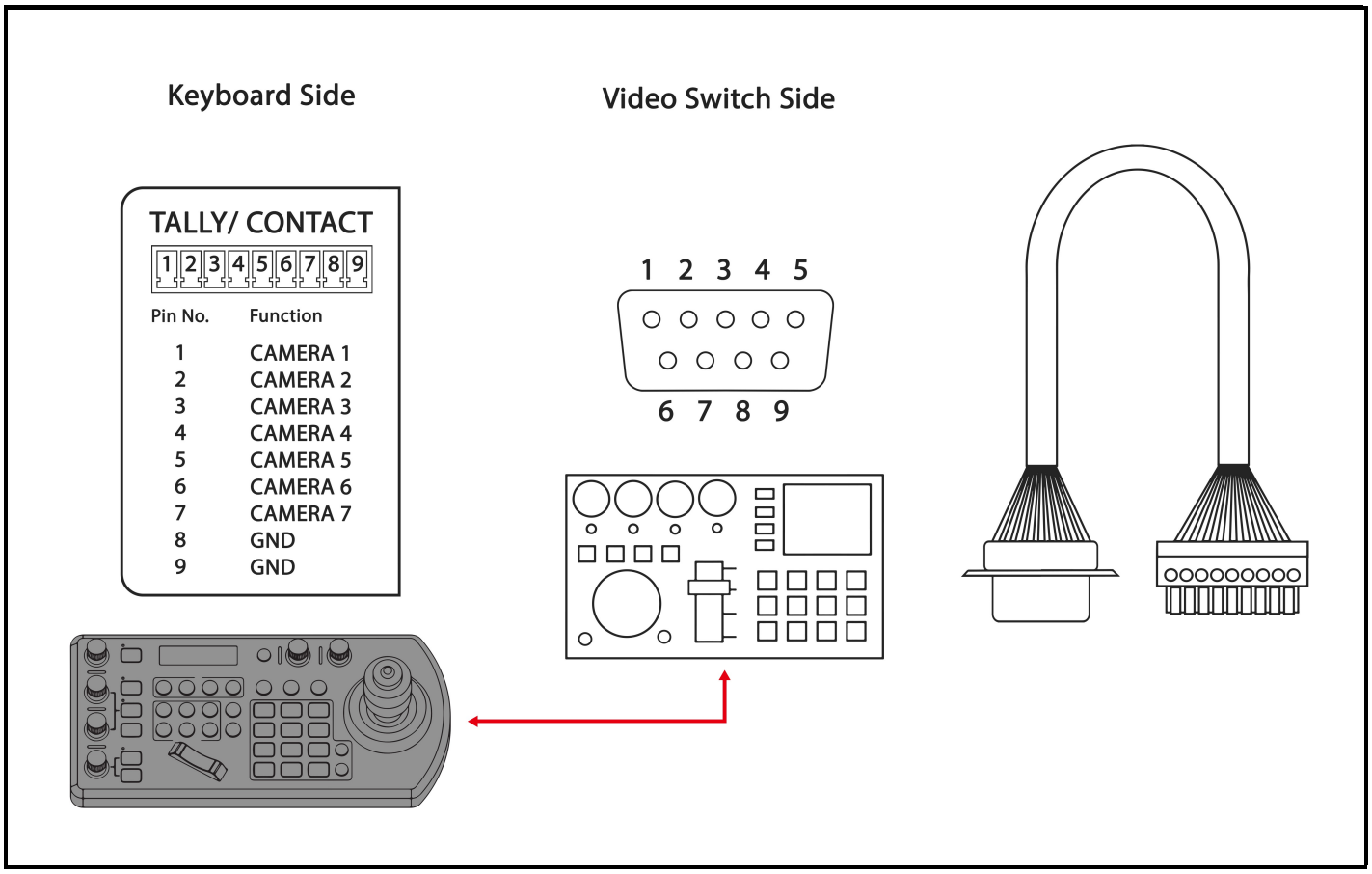

1. On the keyboard side, connect pins 1-8. On the Video Switch side, connect pins 1-9, excluding pin 8.

2. Link keyboard pin 8 with video switch pin 9.

3. Connect keyboard pin 1 to video, switch pin 1, pin 2 to pin 2, and continue similarly (you can decide the rest based on the pattern), ensuring pin 7 is connected to pin 7.

Set Up

1. GPI I/O Input Mode for Tally Signal from Video Switch:

a. Connect the camera to the keyboard using a standard RS-422 control cable.

b. Establish a connection between the keyboard and the video switch using a tally function cable.

c. Navigate to KEYBOARD SETTING > GPI I/O > Setting, and switch it to Input mode. Exit to the home directory.

d. After completing the above steps, you can switch between cameras using the video switch. For instance, selecting camera 1 on the video switch sends a tally signal to the keyboard via the tally function cable. The keyboard then transmits this tally signal to camera 1 through the standard RS-422 control cable, activating camera 1's tally light. The keyboard can now control camera 1's pan and zoom.

e. If you switch to camera 2 on the video switch, the tally light for camera 2 will turn on, and the tally light for camera 1 will turn off.

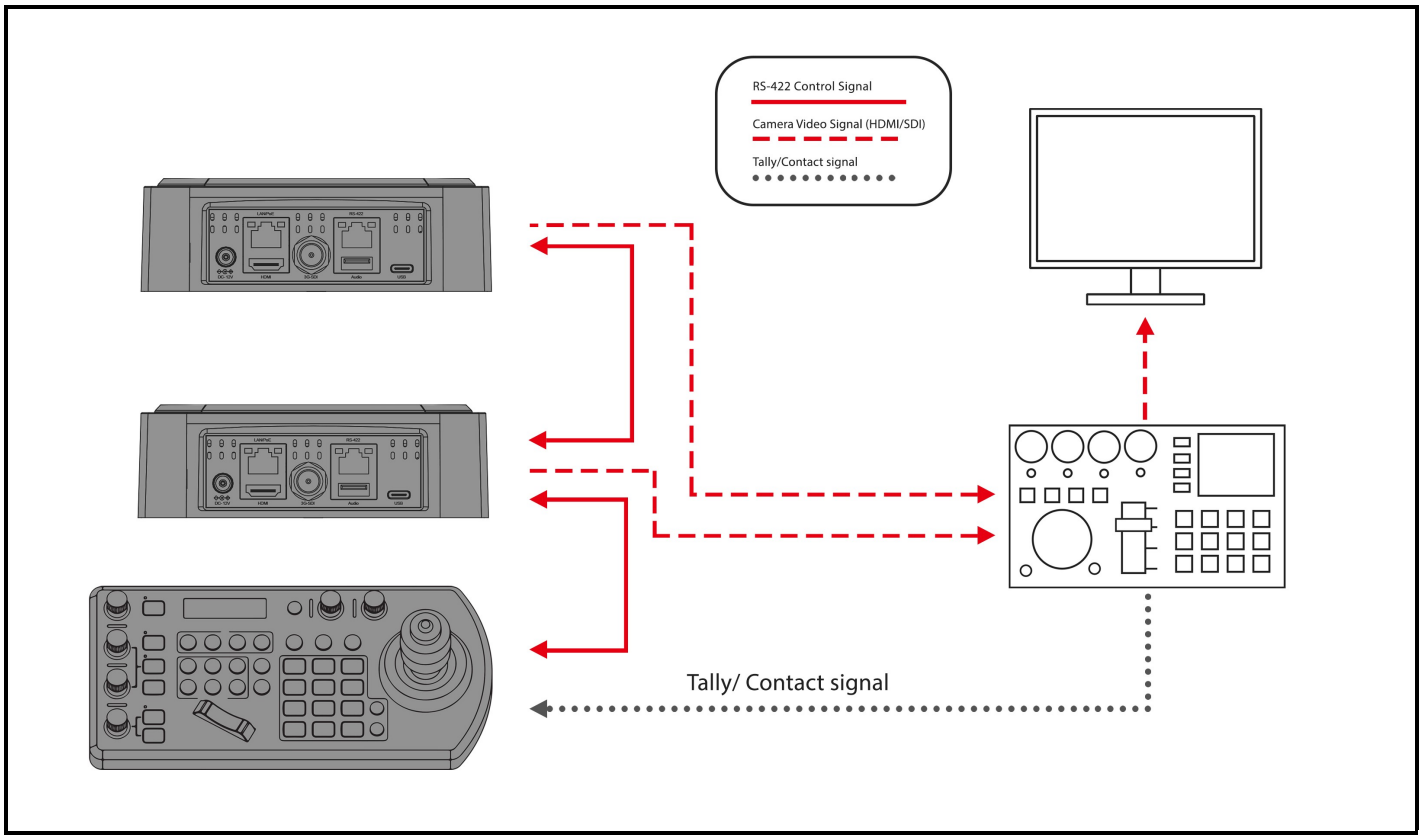

2. GPI I/O Output Mode for Tally Signal Sent by Keyboard Controller:

a. Connect the camera to the keyboard using a standard RS-422 control cable.
b. Navigate to KEYBOARD SETTING > GPI I/O > Setting, and switch it to Output mode. Exit directly to the home menu.
c. After completing the above operation, you can switch between different cameras using the keyboard. For instance, selecting camera 1 on the keyboard sends a tally signal to camera 1 via the standard RS-422 control cable. As a result, camera 1's tally light turns on, and the keyboard gains control over camera 1's pan and zoom.
d. If you switch to camera 2 on the keyboard, the tally light for camera 2 will turn on, and the tally light for camera 1 will turn off.

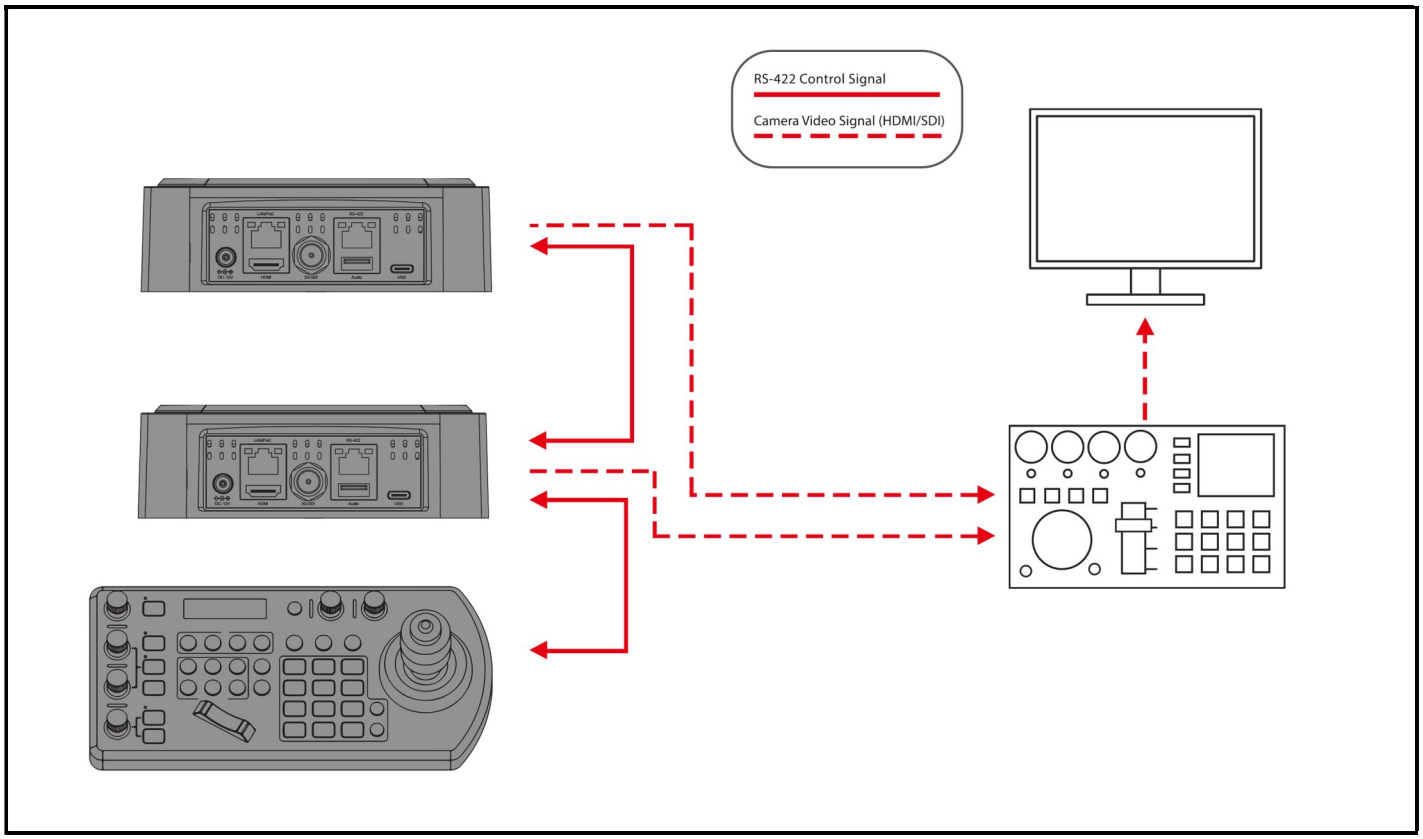

Once connected to the network, the camera can be configured and controlled through the web interface on any web browser that supports HTML5. This next section will explain the various sections of the web interface and what they can do.

LOGIN
To log in to the web interface, first, make sure that the camera is connected to the network and that your computer is on the same subnet as the camera.



Factory-Default Camera Network Settings:
Static IP Address: **192.168.0.13**
Subnet Mask: **255.255.255.0**
Gateway: **192.168.0.1**

NOTE: To obtain the IP address of the camera, open the OSD Menu and scroll down to the Status section. Alternatively, download Bolin's IPC search tool from the website (www.bolintechnology.com) onto a Windows computer and run the tool to discover the camera on the network.

1. Once the camera's IP address has been obtained, the user should enter it into the web browser on their computer.
2. The user will be prompted to enter a username and password. By default, the credentials are:

   Username: admin

   Password: admin

   NOTE: The first time you log in to the web interface, you will be prompted to set a new password. For best security practices, enter a password that is at least 8 digits long, and contains one capital letter, one lowercase letter, one number, and one symbol.
3. Once the user enters the credentials, they should press the login button.

NOTE: Forgot Your Password? If the user forgets/loses the password to their camera, our support team can help them recover it. The user must first download the IPCSearch tool from our website (www.bolintechnology.com) onto a Windows computer that is on the same subnet as the camera. Then, run the tool to search for their camera. Select the camera that they wish to recover and click the "Forgot Password" button at the bottom of the window. The program will provide the user with a generated key. Email "support@bolintechnology.com" with the key. Our support team will generate and provide the user with a temporary password that is valid for only 24 hours. The user should enter this temporary password to create a new password within 24 hours of receiving the key, otherwise, they will need to follow this procedure again. The user should not turn their camera off while waiting to receive the temporary password, otherwise, the temporary password associated with the key will become invalid.

LIVE VIEW

Once the user logs in to the camera, they will be taken to the Live View page. From the "Live View" page, the user will be able to:

- See a preview of the video output (NOTE: This feed will be delayed by 1–2 seconds.)
- Adjust and control PTZ functions
- Set and recall camera presets

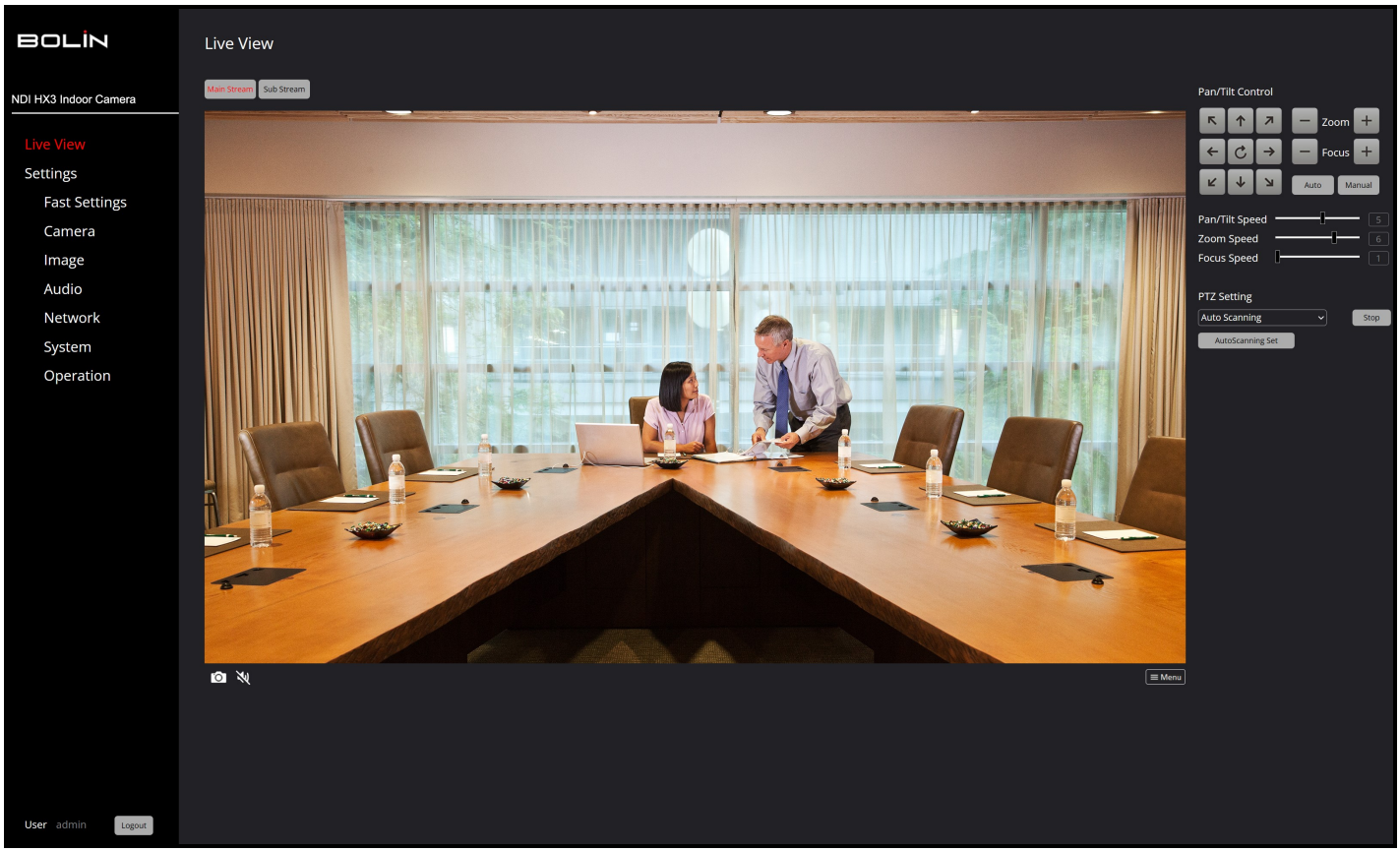

Adjusting and Controlling PTZ Functions

On the “Live View” page, the user will observe a “Menu” icon situated at the bottom right of the live view image. Additionally, on the right side of the page, there are “Pan/Tilt Controls”. This section comprises a set of arrows and sliders, specifically designed to control the camera.

The arrows are utilized to pan (move side to side) and tilt (move up and down) the camera. The focus and zoom buttons are provided for the user to adjust the view. The user can zoom in (+) or out (-), and manually adjust the focus to be closer (+) or further (-).

Furthermore, there are speed-setting sliders that permit the user to alter the speed of the camera’s movements, including pan, tilt, focus, and zoom. This allows the user to customize the camera’s operations to suit their needs.

Within the **PTZ Setting** drop-down menu, the user will discover the following options:

1. **Auto-Scanning**: The camera image pans automatically from left to right or right to left at a speed defined by the user (Speeds 1-8).
2. **Preset**: The user can set and recall up to 64 camera presets (The camera supports saving a total of 255 presets). These presets can be recalled through the web interface, IR Remote, or PTZ Controller.
3. **Tracking**: The camera will record a series of presets that are recalled in a specified order.
4. **Scanning**: The camera image pans from left to right or right to left between up to 12 points defined by the user at a speed also defined by the user (Speeds 1-8).
5. **Power On Action**: Users can define a set of actions that a camera performs (preset recall, scan, trace, or cruise) once powered on.
6. **Cruise**: The camera will record a series of movements that an operator makes, which can then be recalled whenever a user prefers.

Creating and Recalling Presets

To save presets, the user should adhere to the following steps:

1. Utilize the PTZ controls of the web interface, IR controller, or a PTZ controller to adjust the camera to the position(s) they wish to save as a preset.
2. After positioning the camera, click on the ‘Create’ button. Subsequently, select the preset number under which they want to save this setting. Label the preset in the ‘Name’ field and click ‘Save’.
3. To recall a preset, select the preset number on the Web Interface and click the “Go” button.
4. A saved preset can also be deleted by selecting it and clicking on the Delete button.

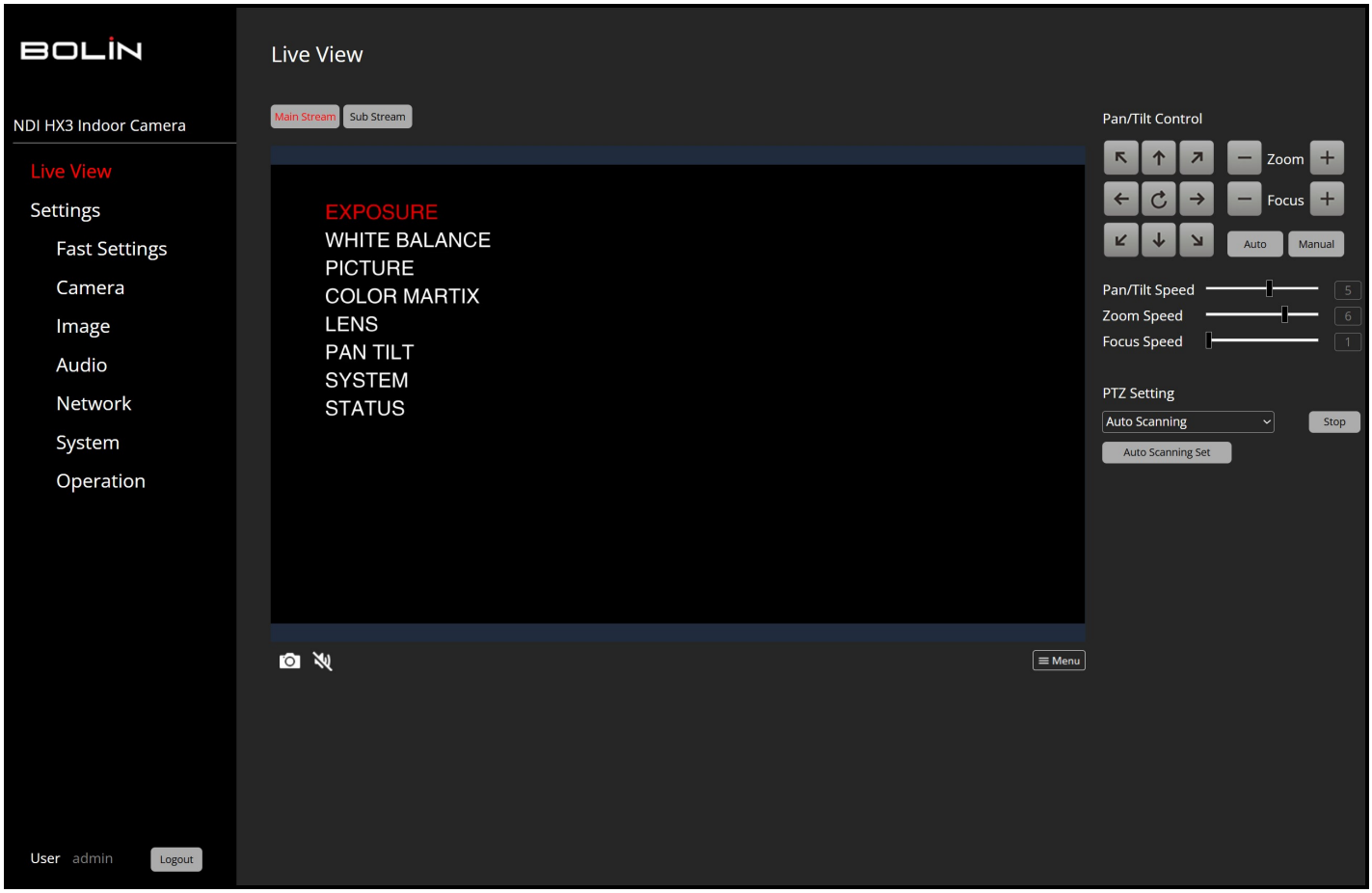

Adjusting OSD Menu Settings from the Web Interface

The OSD Menu settings can be accessed and adjusted from the Web Interface. On the “Live View” page, locate and click the “Menu” icon situated at the bottom right of the live view image to display the OSD menu. The user can navigate through these settings using the arrows under “Pan/Tilt Control”. The middle button is used to select, and the right arrow button is used to modify the setting. To exit this menu, simply click on the “Menu” icon again. The settings available in this menu encompass:

- Adjust Exposure, White Balance, Picture (Noise Reduction, E-Flip, ND Filter, IR Filter), Gamma, Lens (Focus, Stabilization), Pan & Tilt, Genlock, System (Pelco, Visca, IR, Baud Rate, Tally, Audio, Video Format) settings, and view System Status.

SETTINGS - FAST SETTINGS

This section provides quick access to frequently used settings. The Fast Settings page has four tabs: Device, Network, Codec, and User. For more information about these settings, please refer to the corresponding section in this user guide.

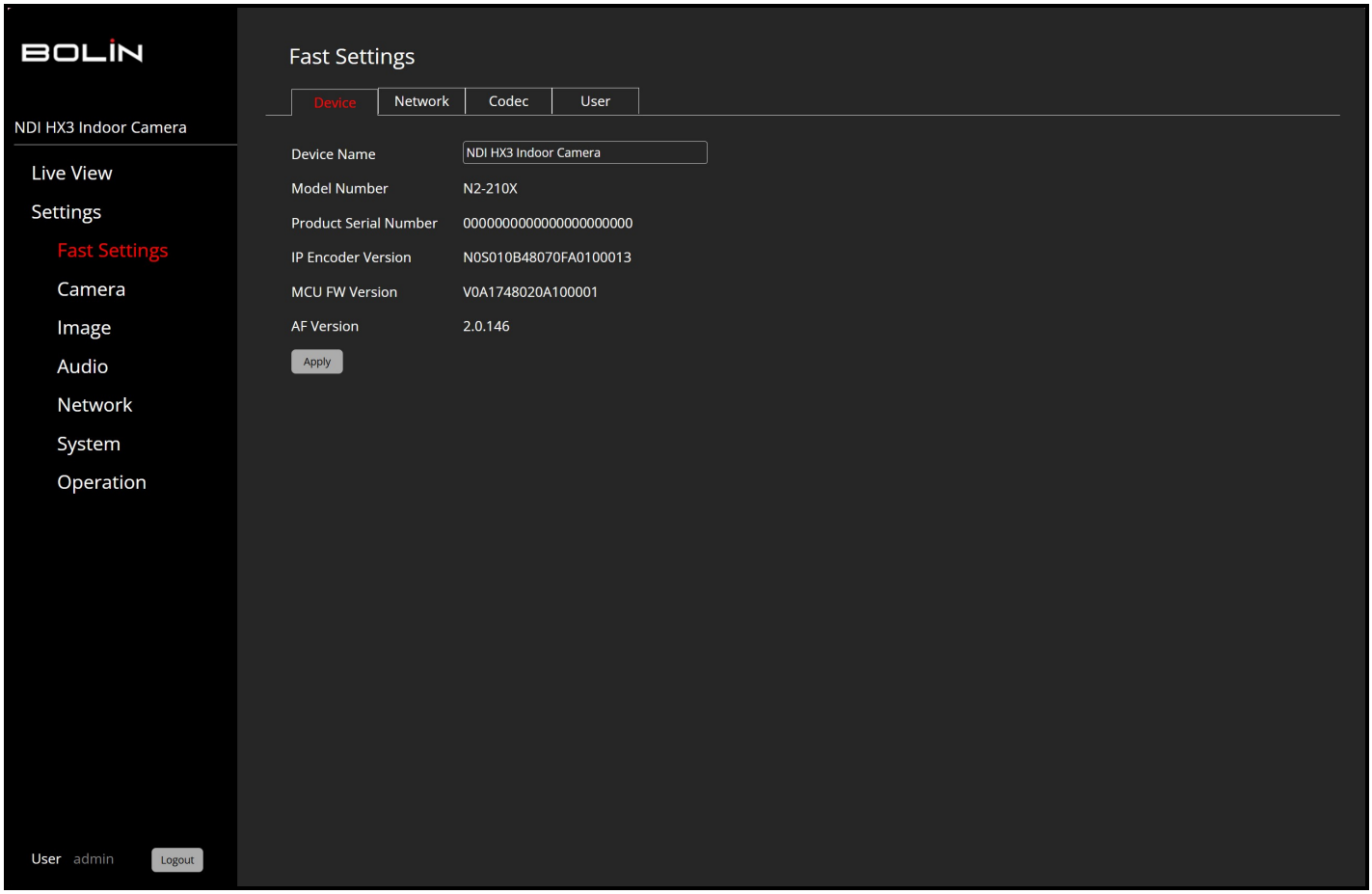

CAMERA - **CAMERA SETTINGS**

This page consists of 3 tabs: Codec, Digital Output, and OSD.

CODEC: From the Codec tab, users can configure the video streams to meet their requirements. The various settings and their functions are described below.

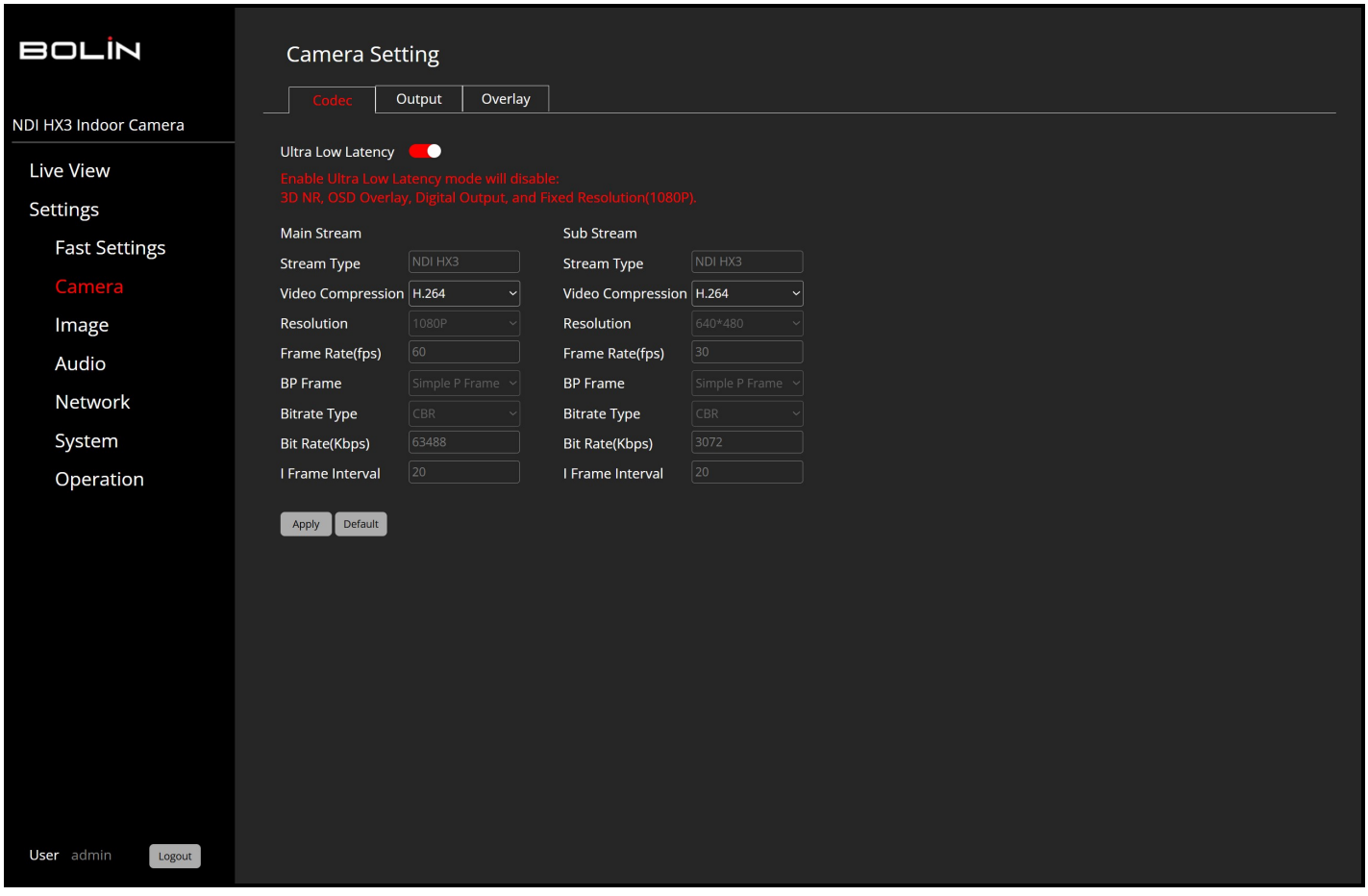

OUTPUT: Here you can select the HDMI/ SDI video resolution output of the camera.

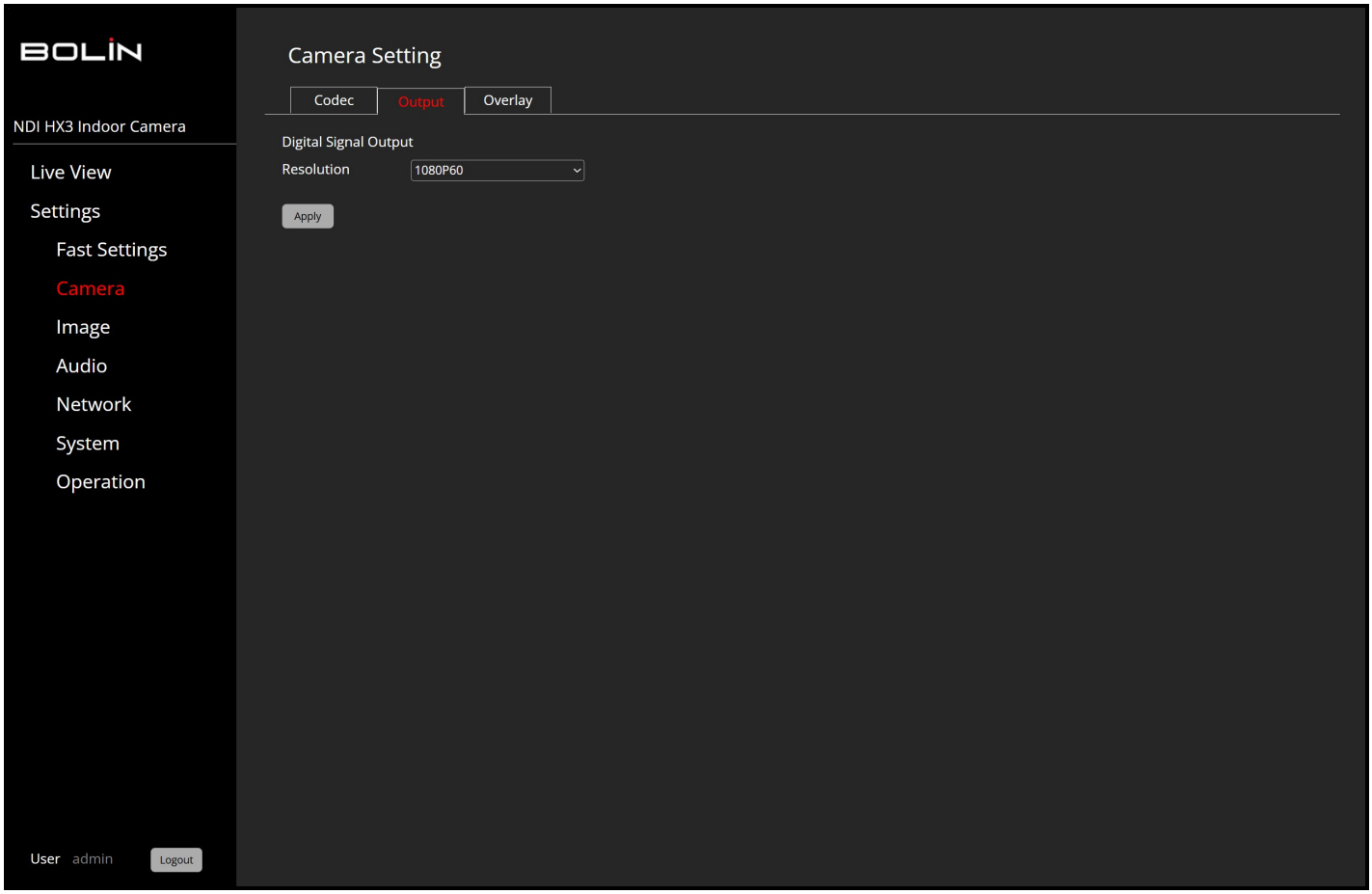

OVERLAY

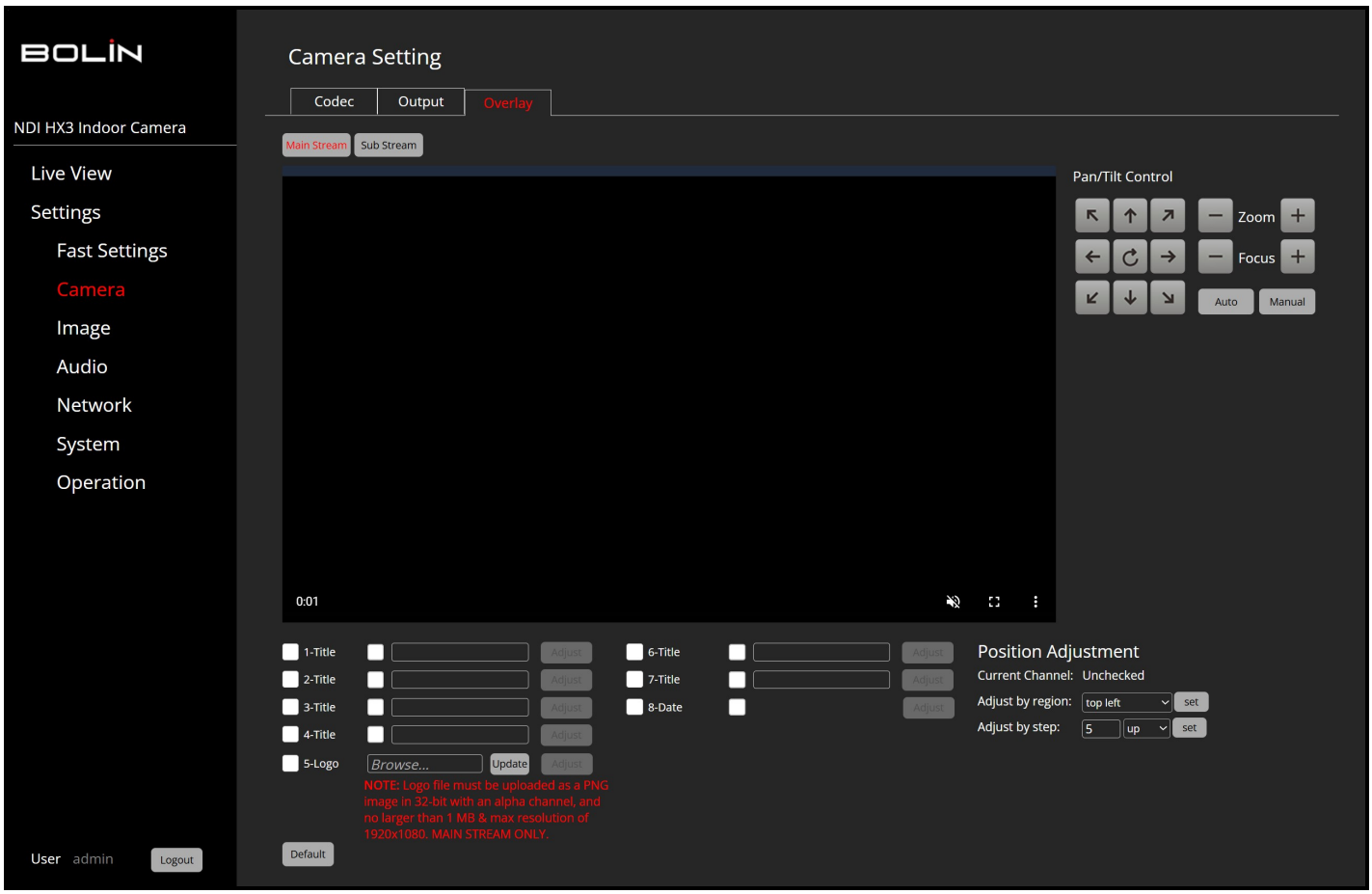

Steps to implement an on-screen overlay:

1. Begin by adding text to the title bar, such as in '1-Title', then click on the checkbox located furthest to the left (which will turn red with a white check mark) to display it on the live feed image.
2. The box closest to the text bar is initially set in white. To alter the text color, click on this box. The user can select from white, black, yellow, red, and blue.
3. To reposition the text within the live feed image, make use of the 'position adjustment' section situated on the left of the page.
4. The '5-logo' option allows the user to upload an image. The image must be in PNG format and have dimensions less than 1920x1080 pixels. Please note

that this image will only be displayed on the user's main stream.

IMAGE - **IMAGE SETTINGS**

The image settings page consists of 6 tabs. Exposure, White Balance, Picture, Picture 2, Scene, and Lens.

The **EXPOSURE** tab lets you set the exposure to: You can choose from the following modes: Full Auto, Manual, Shutter Priority, or Iris Priority. Please be aware that the parameters (such as Iris, Shutter Speed, and others) will automatically adjust according to the selected mode.

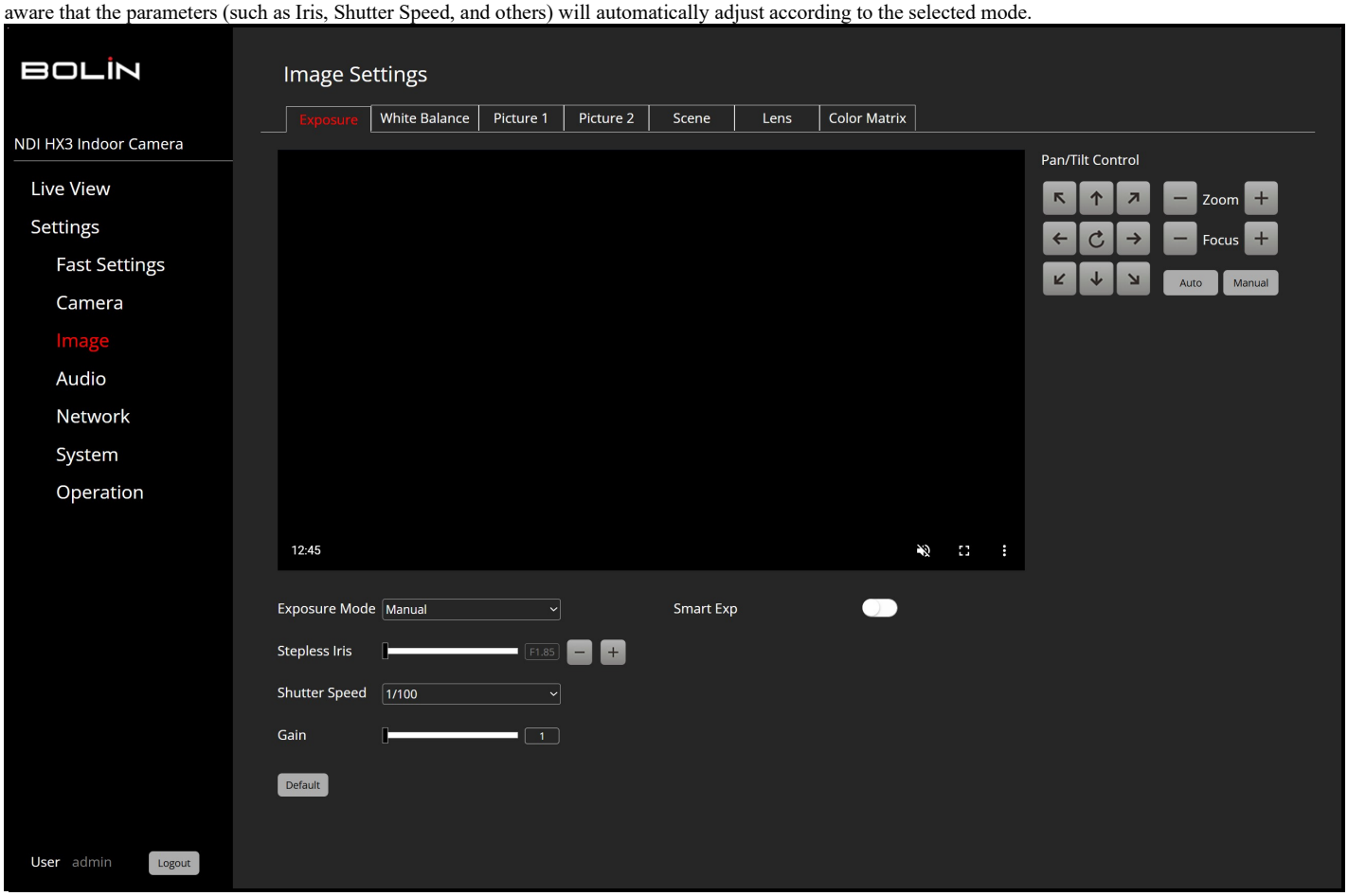

WHITE BALANCE: The white Balance menu is utilized for choosing the mode of white balance.

WB Modes include: Auto, Indoor, Outdoor, OPW, ATW, User, Outdoor Auto, SVL Auto, SVL, SVLOutdoor Auto.

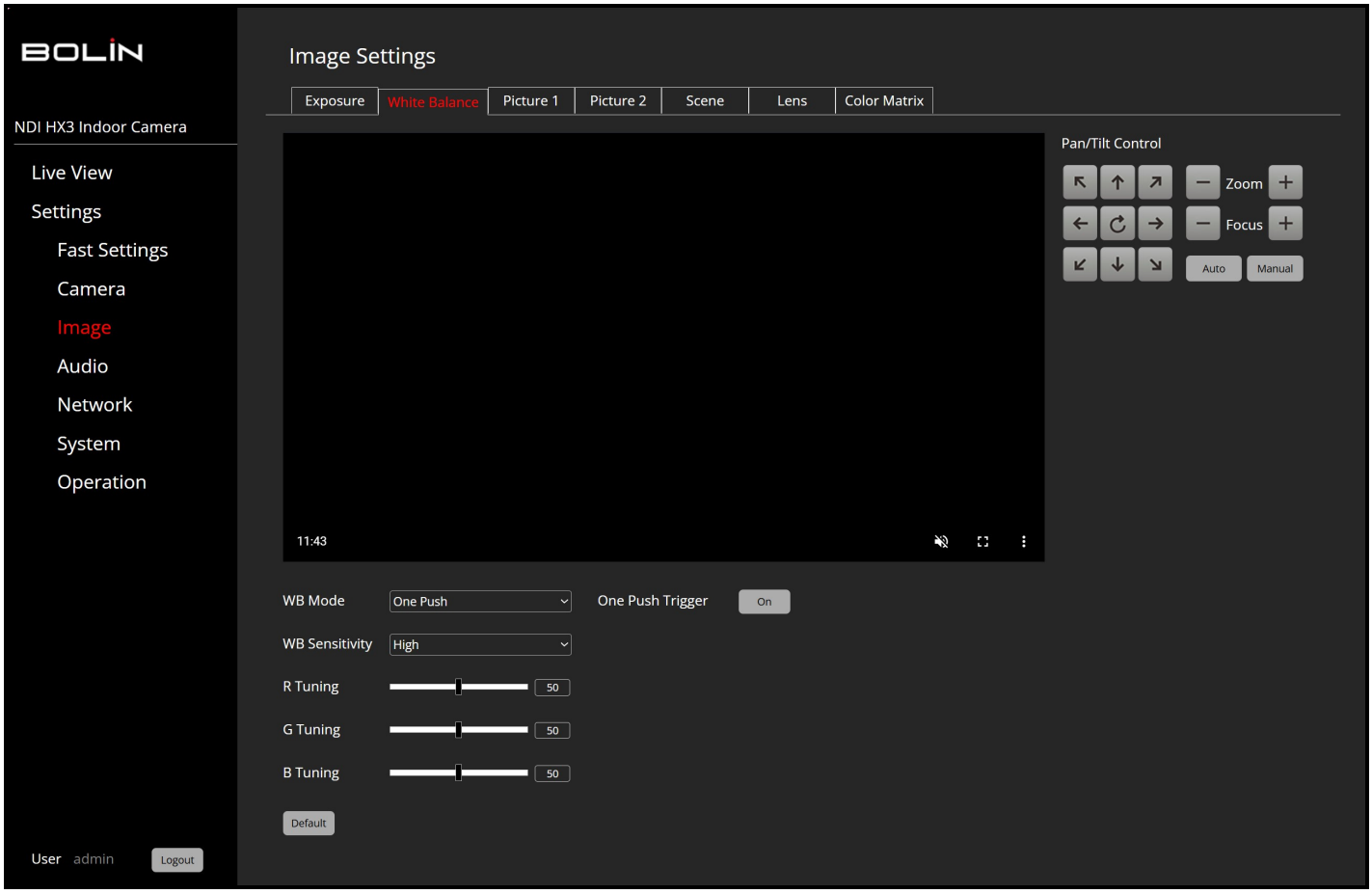

PICTURE 1: The settings include adjustments for Sharpness and Hue, as well as 2D and 3D Noise Reduction. There are also options to turn on or off features such as Flip, Mirror, Portrait, Backlight Compensation, and De-Flicker. The De-Flicker feature has settings for Off, 50Hz, and 60Hz.

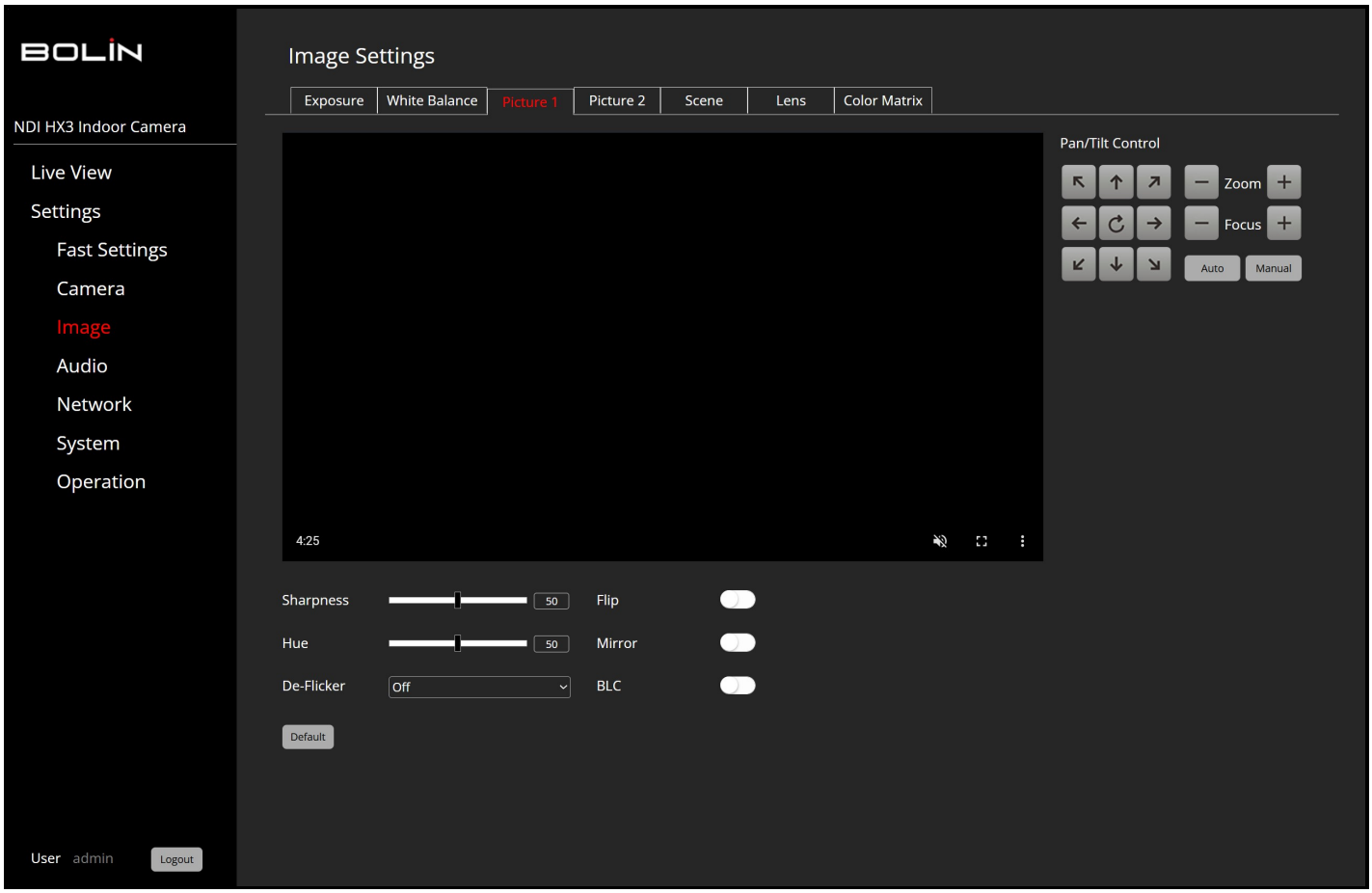

PICTURE 2: The settings allow for adjustments to the Gamma level, Contrast, Saturation, and Brightness. There is also an option to turn on or off the Wide Dynamic Range (WDR), along with an option for level adjustment.

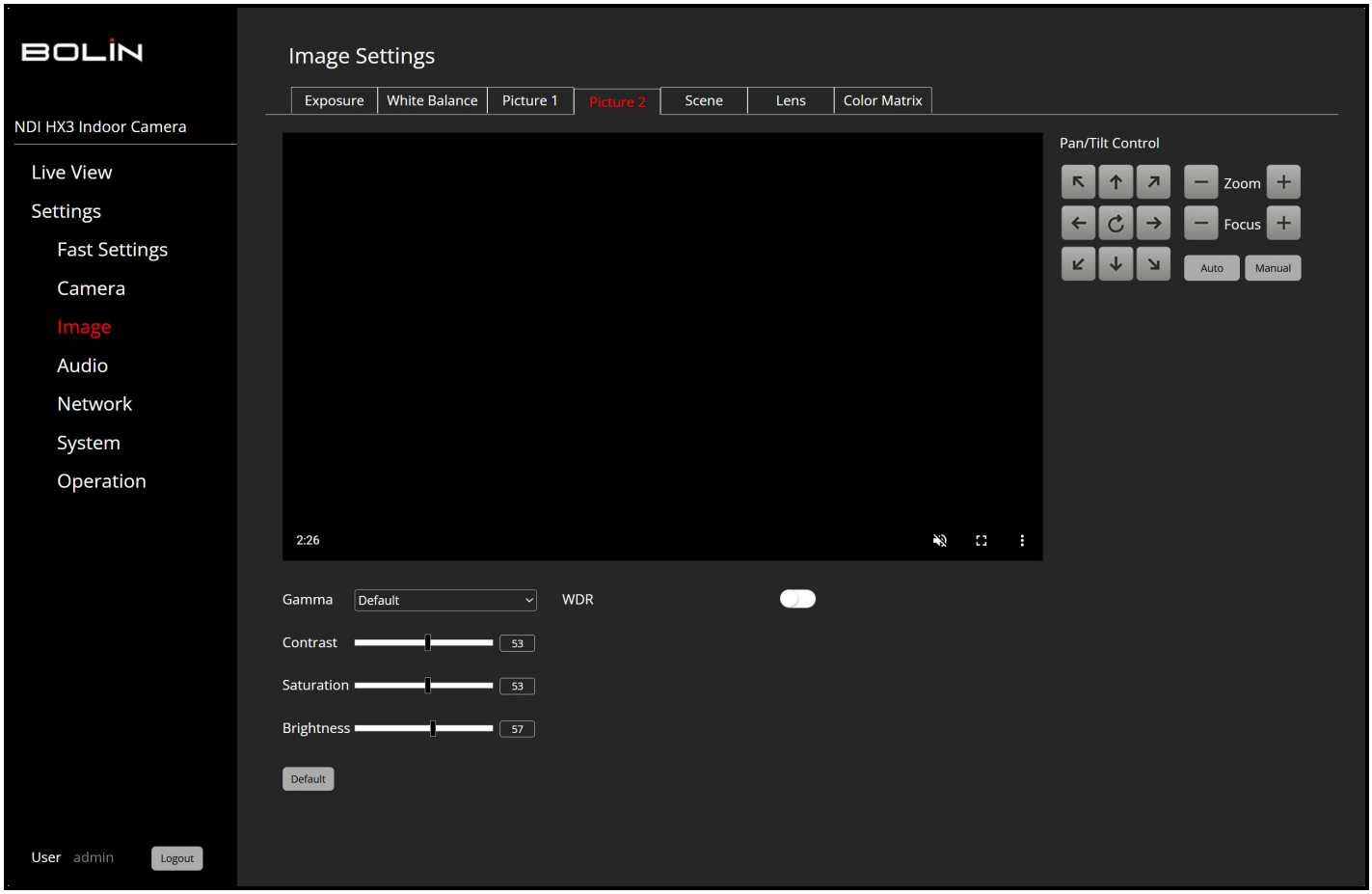

SCENE: The settings include Scene presets with options for Default, Brightness, Clear, and Soft. There are Defog options with settings for Off, Auto, Manual, and Low. The Day/Night Mode has settings for Day, Night, and Auto, with sensitivity adjustments available for Low, Middle, and High levels.

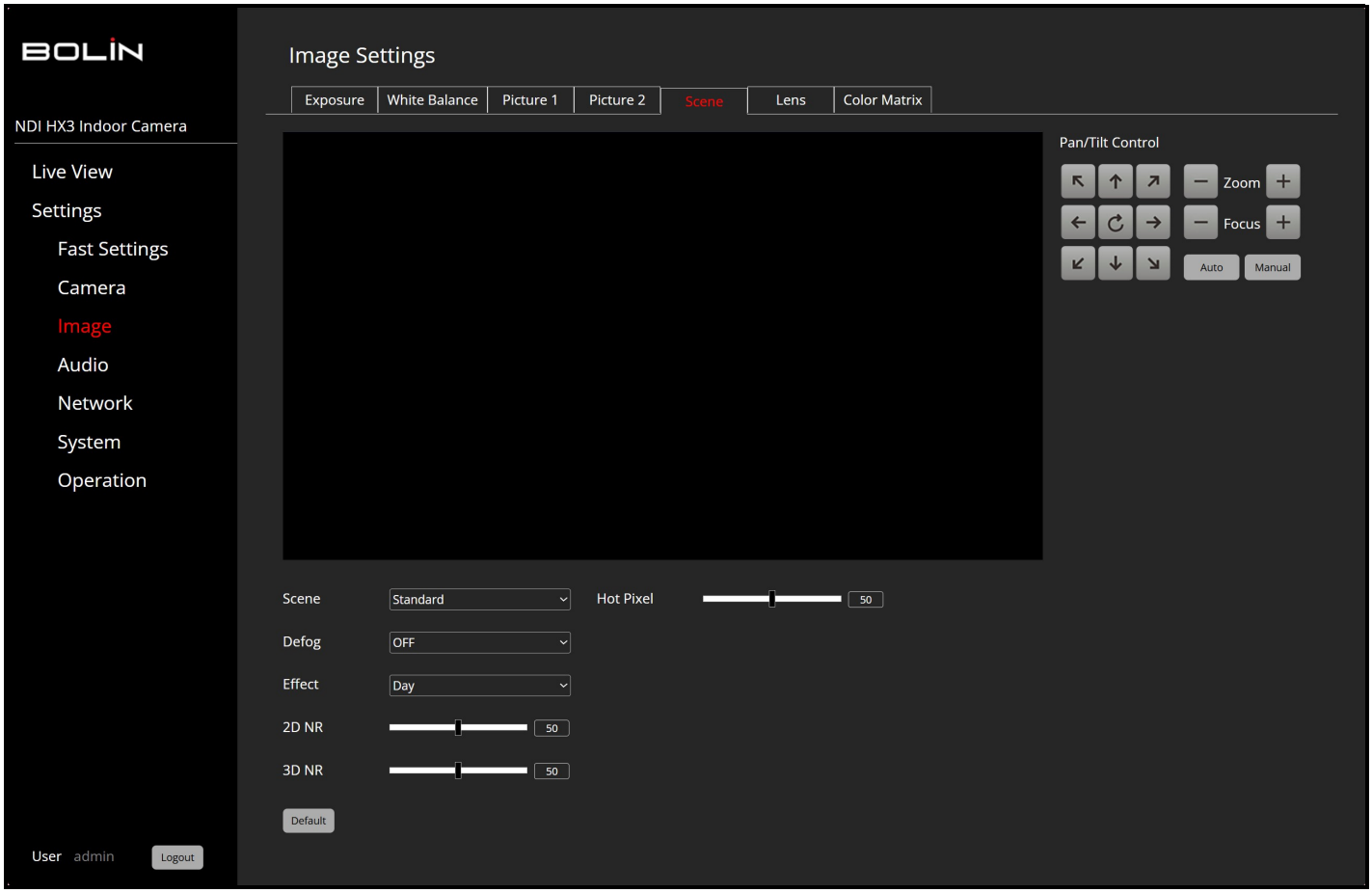

LENS: The settings include a Mode option for Auto, Manual, and One Push White Balance. There are Zone settings available for the entire video image, or specifically for the Top, Center, or Bottom. Near Limit adjustments can be made at distances of 1cm, 30cm, or 1 meter. Sensitivity settings can be adjusted to Low, Middle, or High levels.

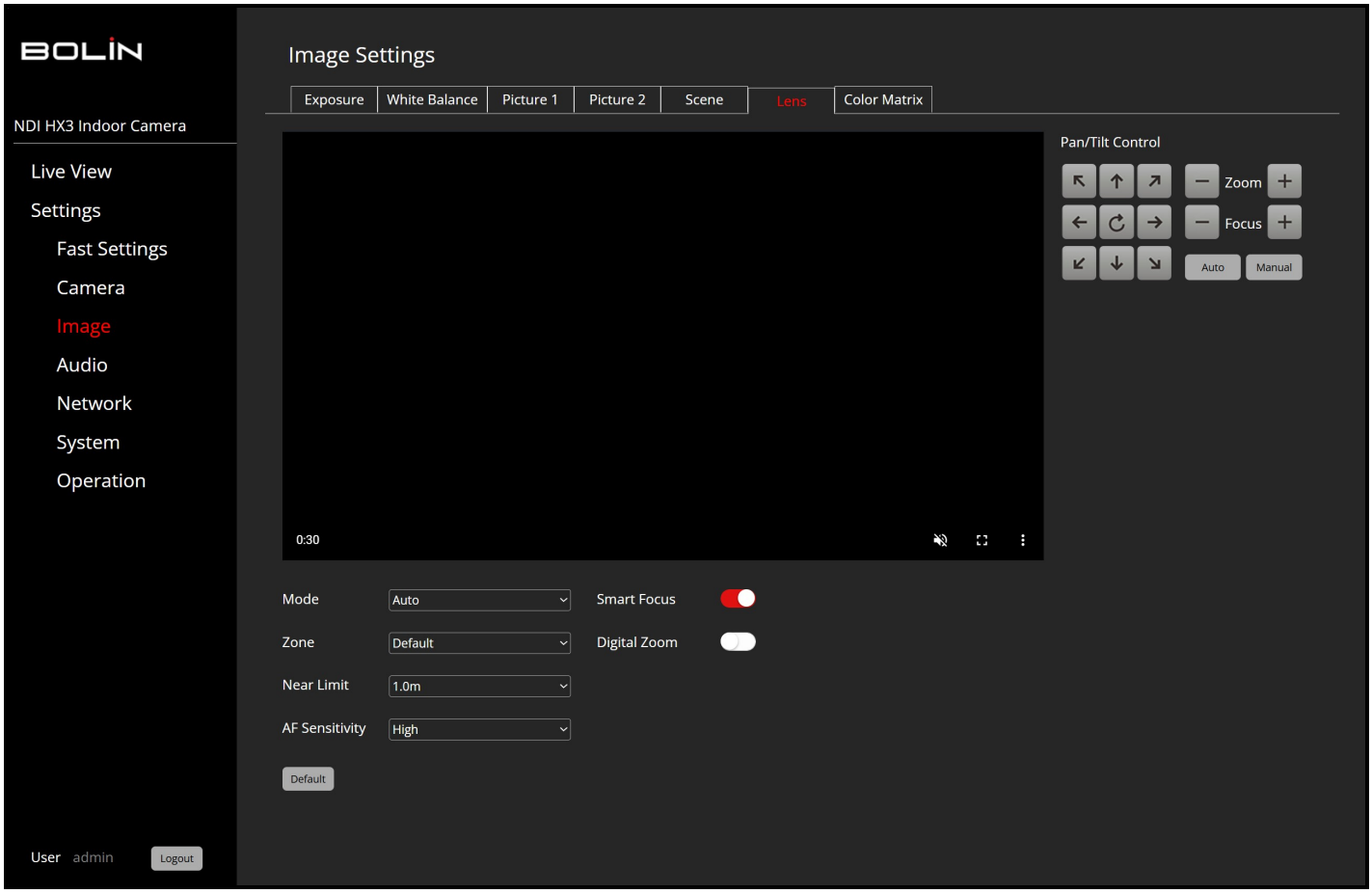

COLOR MATRIX: You can emphasize or weaken a specific color region while keeping the white convergence point unchanged.

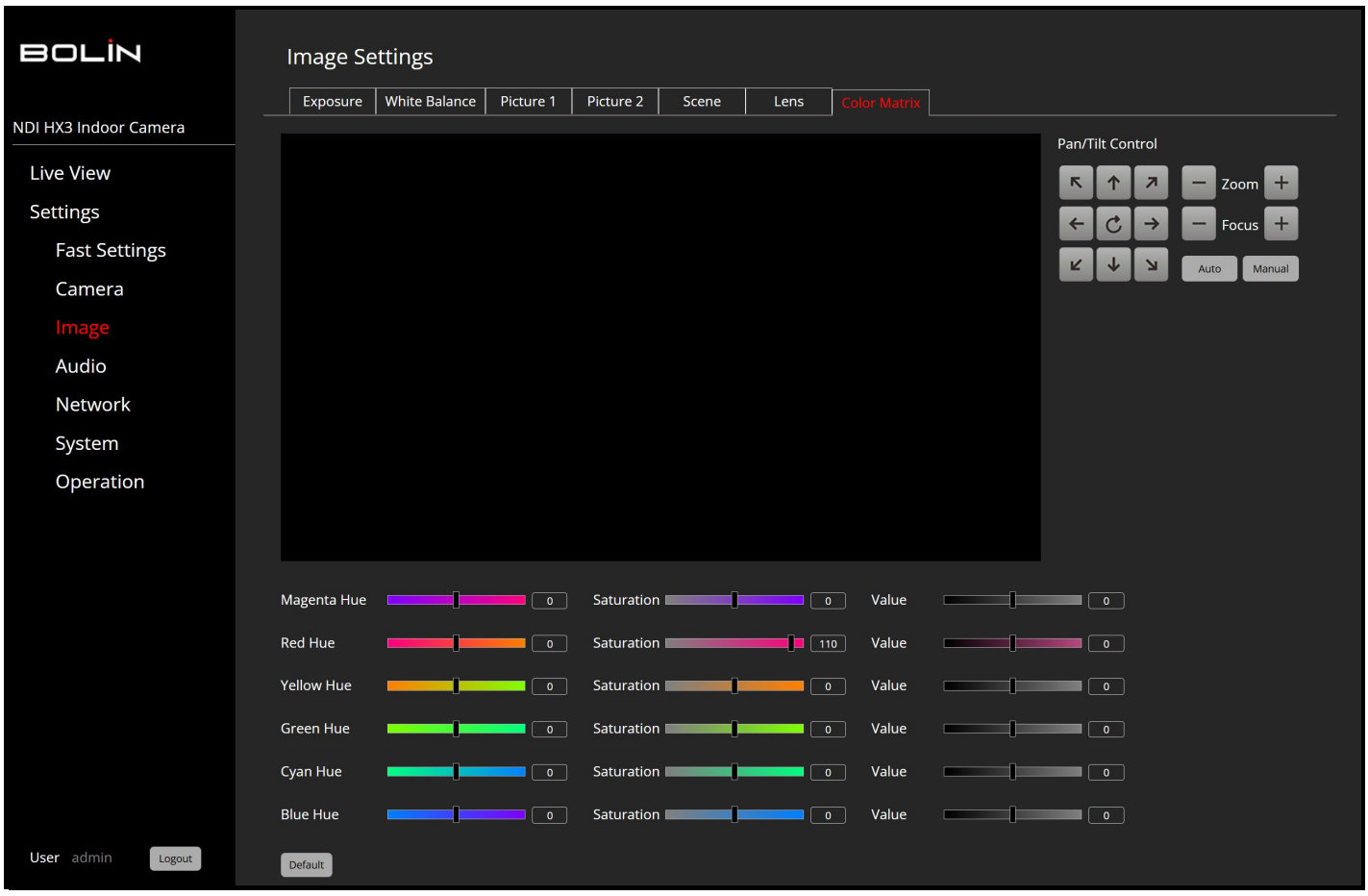

AUDIO - AUDIO SETTINGS

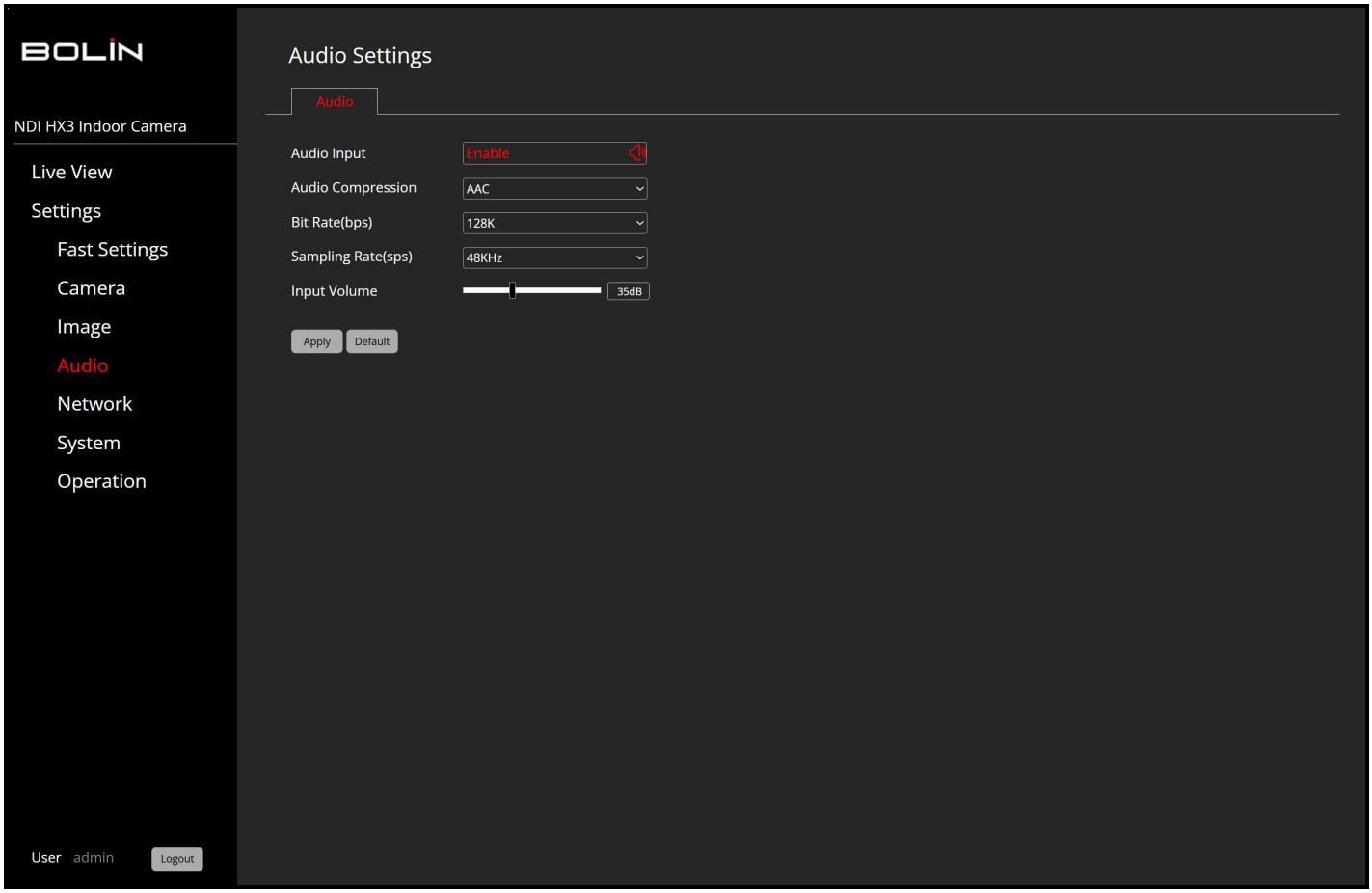

- **Audio Input:** Mute On/Off
- **Audio Compression setting:** AAC, G711a or G711u
- **Bit Rate selection:** 30K, 40K, 48K, 64K, 96K,128K
- **Sample Rate setting**: 16K, 32K, 44.1K, and 48K
- **Input Volume control:** slider from 0 to 100.
- **Apply** settings or reset to **Default** settings.

NOTE: When the audio compression is set to G711a or G711u, the Bit Rate is locked to 64K and Sample Rate to 8K.

NETWORK - **NETWORK SETTINGS**

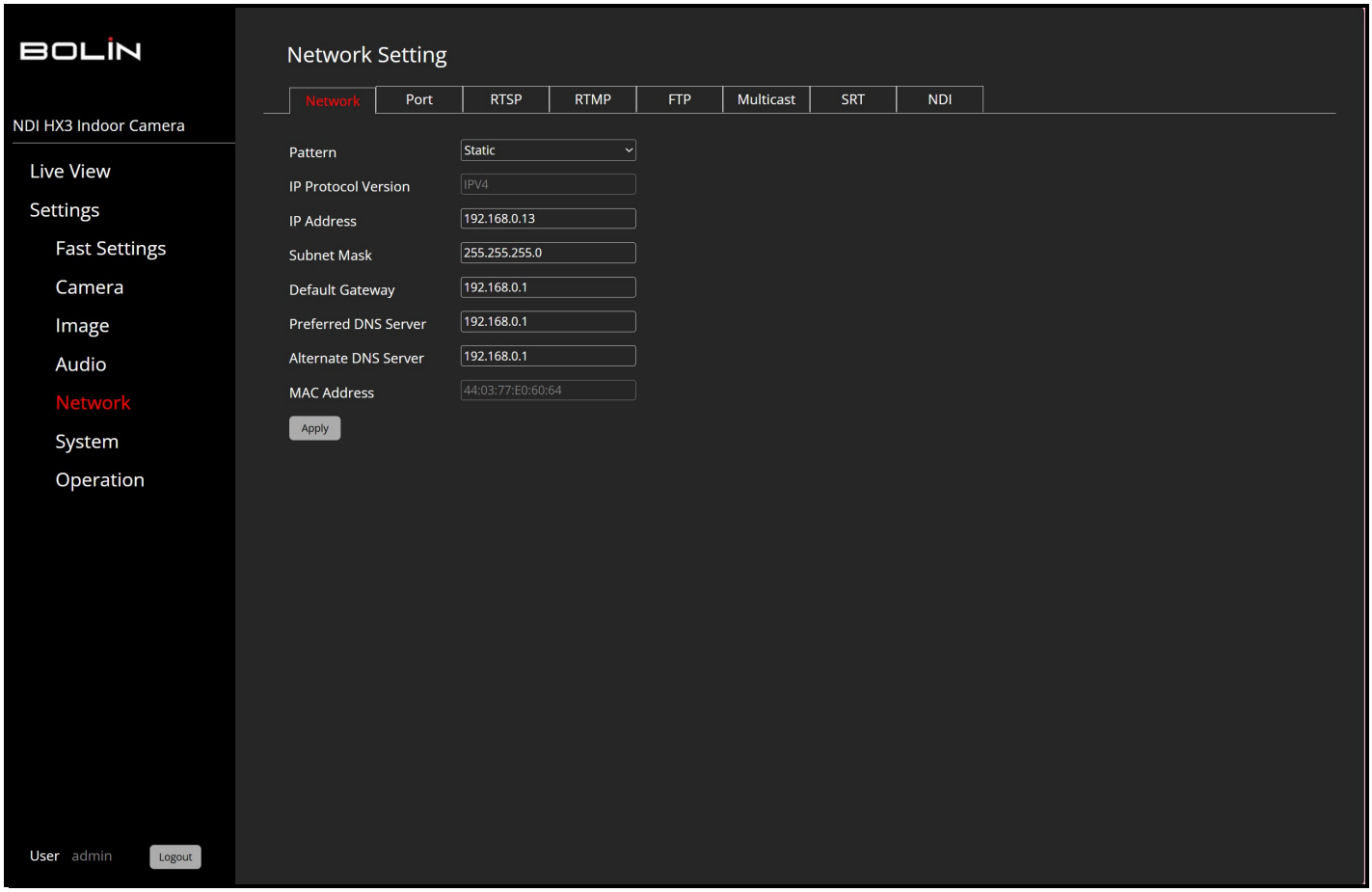

The **NETWORK** tab provides the following configuration options:

- **Pattern:** Choose between DHCP, which allows the camera to automatically receive an IP address from the DHCP server, or Static, which allows you to manually input an IP address.
- **IP Address:** Use the assigned IP address or manually enter a static IP address.
- **Subnet Mask:** This is determined based on the range of the IP address class.
- **Default Gateway:** Enter the IP address of the network's gateway.
- **Preferred DNS (Domain Name System):** Input the IP address of the DNS server.
- **Alternate DNS:** Enter the IP address of an alternate DNS server.

PORT

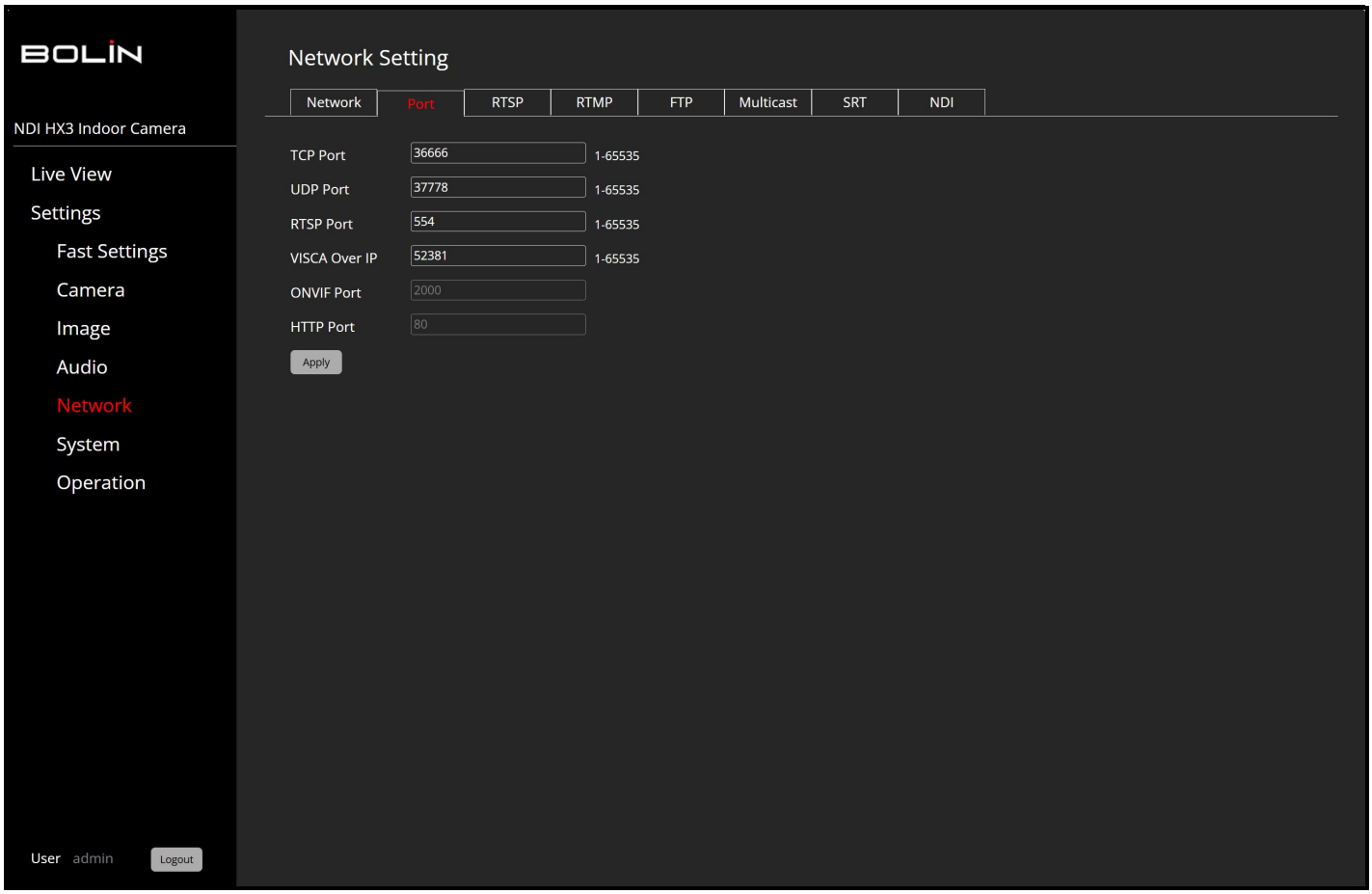

The **PORT** tab provides the following configuration options:

- **TCP Port:** Adjustable within a range of 1 to 65535.
- **UDP Port:** Adjustable within a range of 1 to 65535.
- **RTSP Port:** Defaulted to 554. RTSP is the protocol used for real-time video playback over the network, compatible with software like VLC Media Player. Changing the RTSP port number alters the RTSP video viewing method. As most RTSP streaming software uses port 554, it's generally not recommended to change this port number.
- **VISCA Port:** Defaulted to 52381 to align with Bolin's controller.

RTSP (Real-Time Streaming Protocol): Use the **RTSP** tab to Copy the URL streaming address of the Main or Sub Streams. Paste the RTSP URL address in the Network Stream section of the VLC Media Player (or other video streaming software) to play video in real-time.

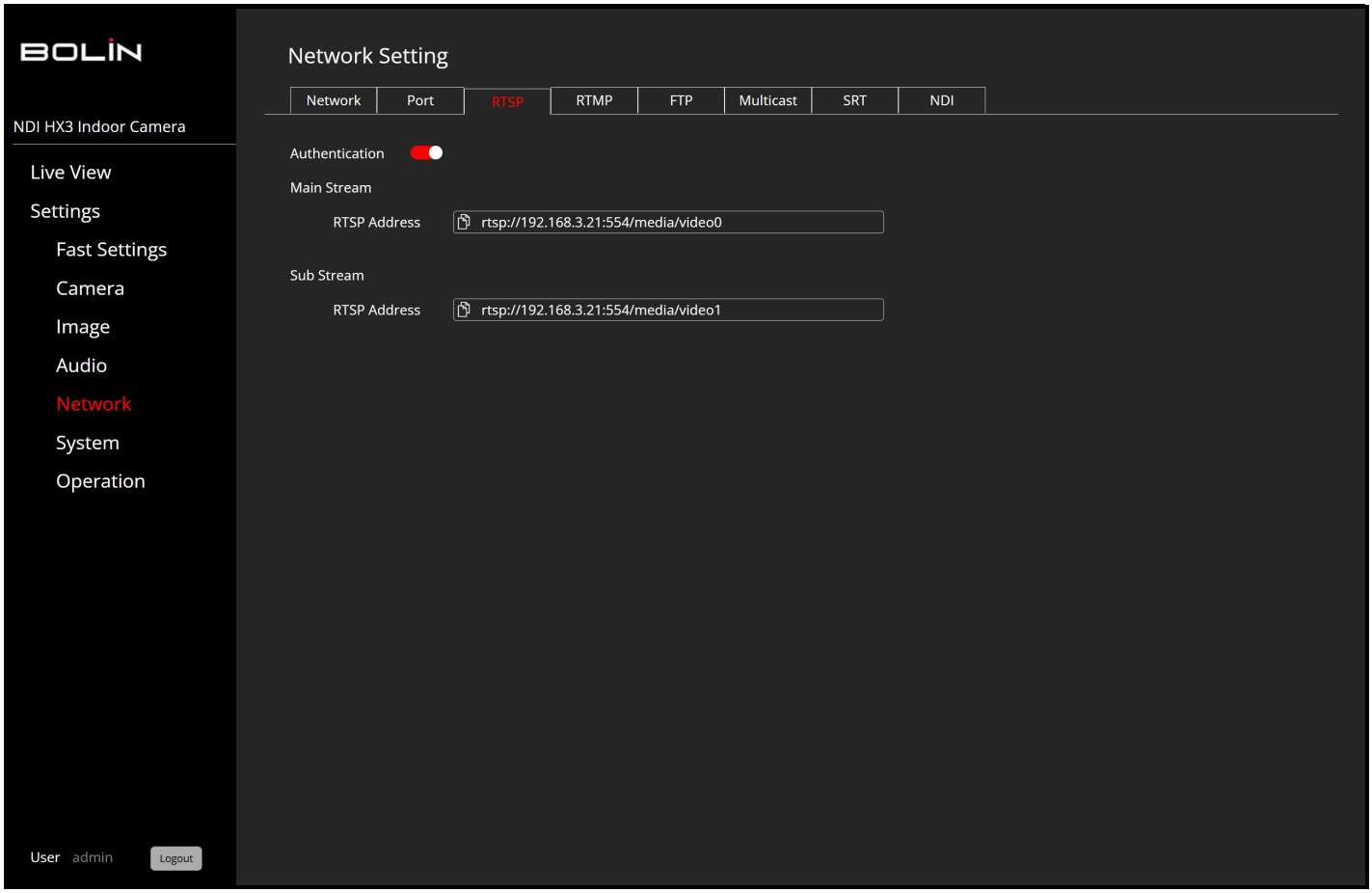

RTMP (Real-Time Messaging Protocol)

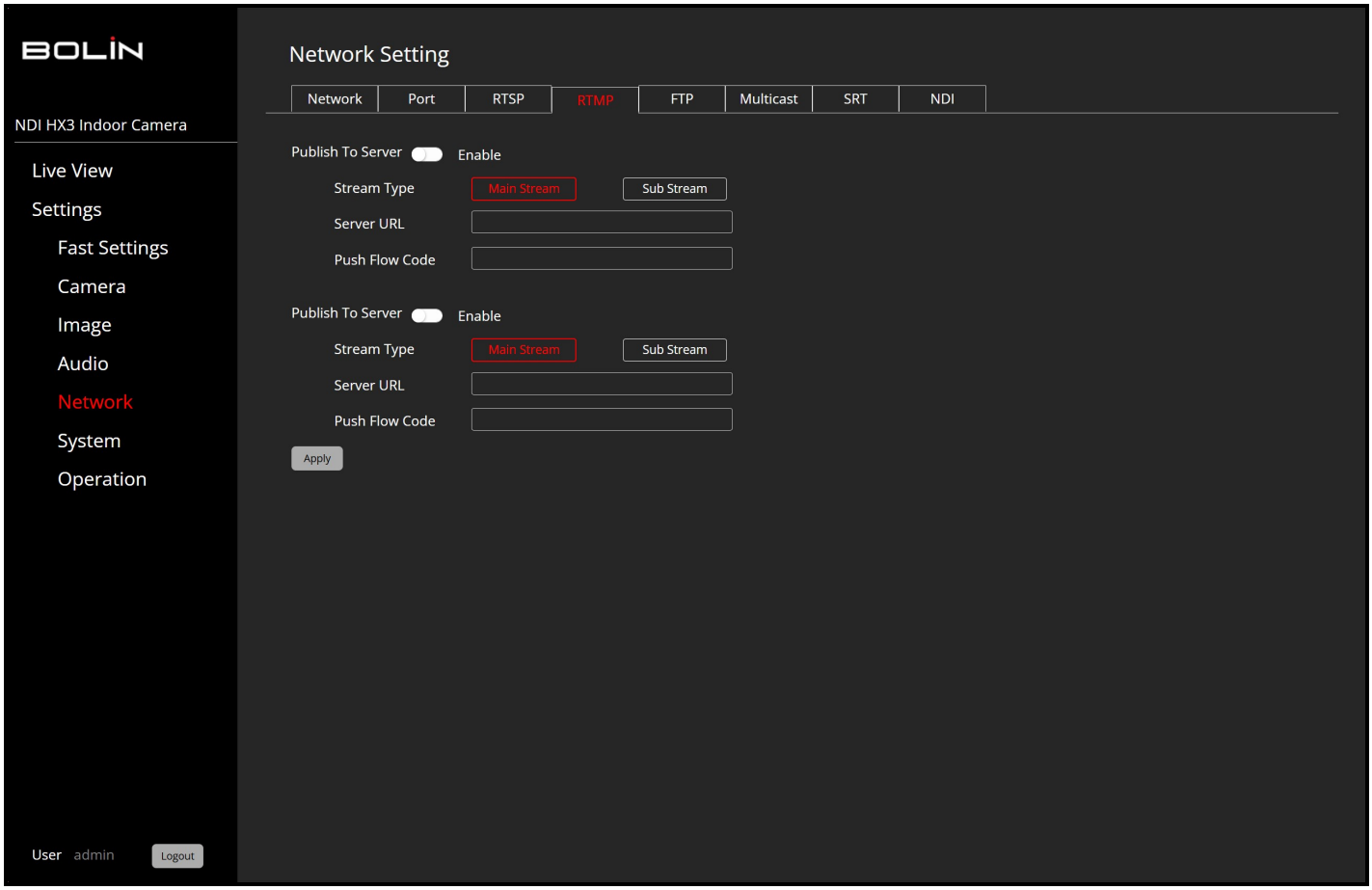

Navigate to the **RTMP** tab to stream or publish a video to a CDN (Content Delivery Network) or a cloud platform. You can obtain the URL stream and key number from an online platform such as YouTube or Twitch, usually found under Stream Settings in YouTube Studio.

- **Stream Type:** Choose between the Main or Sub Stream.
- **Server URL:** Insert the URL copied from the online platform.
- **Push-Flow Code:** Input the auto-generated Key or ID provided by the online platform. There are two “Publish To Server” options available for both Main and Sub Streams.

FTP (File Transfer Protocol)

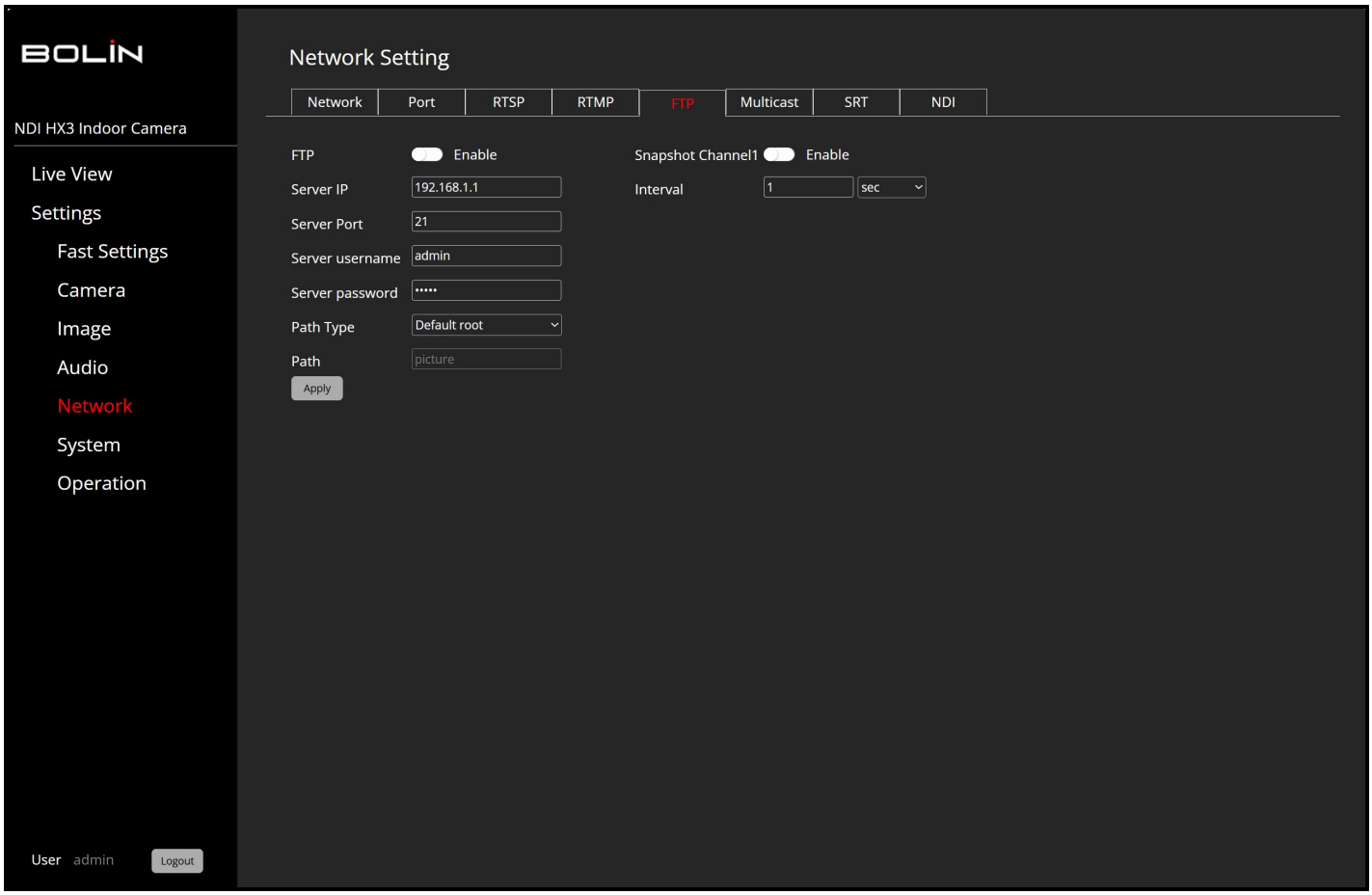

1. Enable the FTP server.
2. Enter the IP address of the FTP server into the ‘Server IP’ field.

3. Enter the FTP server's port number into the 'Server Port' field. This should match the port configured on the FTP server, typically port 21.
4. Enter the FTP server's username and password into the 'Server Username' and 'Server Password' fields, respectively. These credentials should match those configured on the FTP server.
5. Choose the 'Path Type' and 'Path' where you want the snapshot to be saved on the FTP server.

MULTICAST: On this page, users can configure multicast for both the Main and Sub streams. This is particularly useful for conserving bandwidth in live-streaming applications.

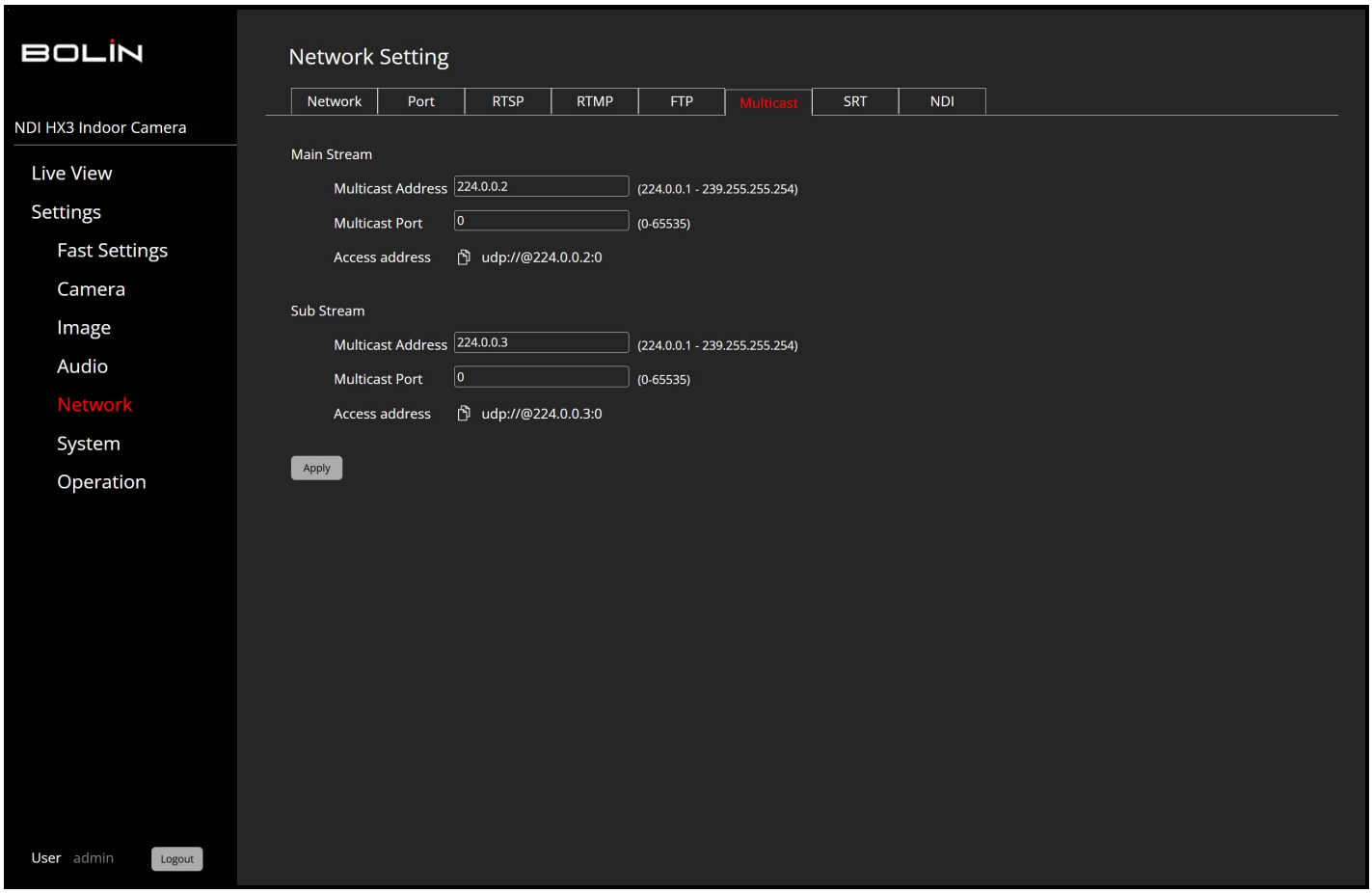

1. Follow the specified Multicast address range to configure a multicast IP address for the Main Stream.
2. Follow the specified Multicast Port range to configure a multicast port for the Main Stream.
3. Click the 'Apply' button and restart the camera to ensure the settings take effect.
4. After the camera completes its power cycle, click the 'Copy' button to copy the multicast URL address. This URL can be used for accessing the Main Stream.

NOTE: Multicast streaming uses MPEG-TS over UDP.

SRT

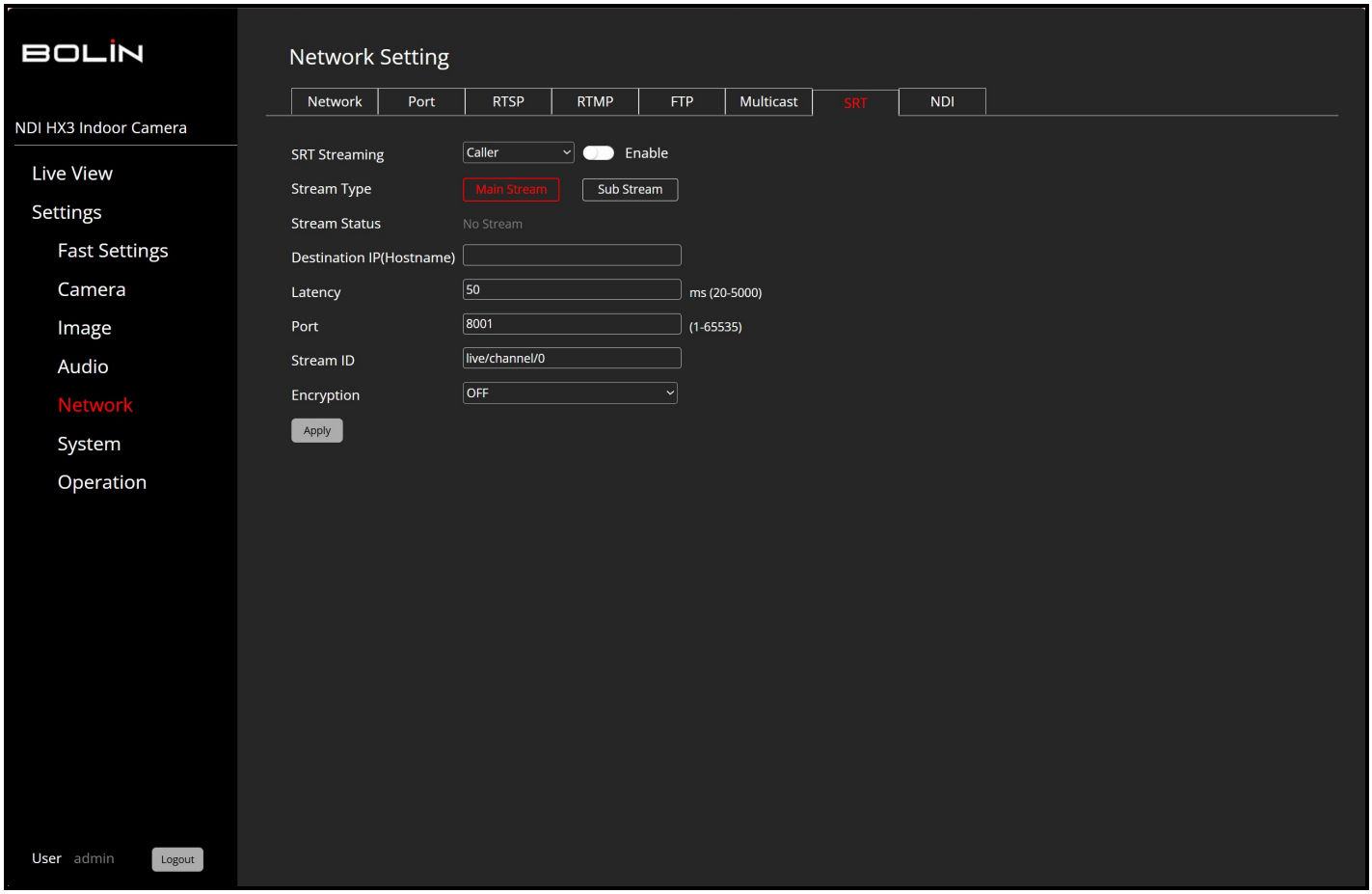

- **Stream Type:** Main and Sub Stream options
- **SRT Streaming:** Enable: Caller, Listener and Rendezvous selection.
- **Caller:** Set the source or destination device as the initiator of the SRT streaming session. Note, Caller mode only is sent to one receiver.
    - 1. The Caller device must know the IP address and port number of the Listener device.
    - 2. Enter the Destination IP and Port # accordingly. Stream ID set to 1 or default and the latency (between Caller and Listener) can be adjusted from 20 to 5000ms.
- **Listener:** Set the device to wait for a request to start an SRT streaming session. The Listener device just needs to know that it should listen to the SRT streaming on a specific port. Enter the Port # accordingly.
- **Stream ID** is set to 1 or default and the latency (between Caller and Listener) can be adjusted from 20 to 5000ms.
- **Rendezvous:** Allows two devices to use the same port to start an SRT session. Both source and destination must be in Rendezvous mode. Enter the Destination IP and Port # according.

NOTE: AES Encryption is available for all three modes (Caller, Listener and Rendezvous) and can be adjusted to: 128,192 or 256-bit encryption to ensure end to end security (no passphrase is required).

NDI

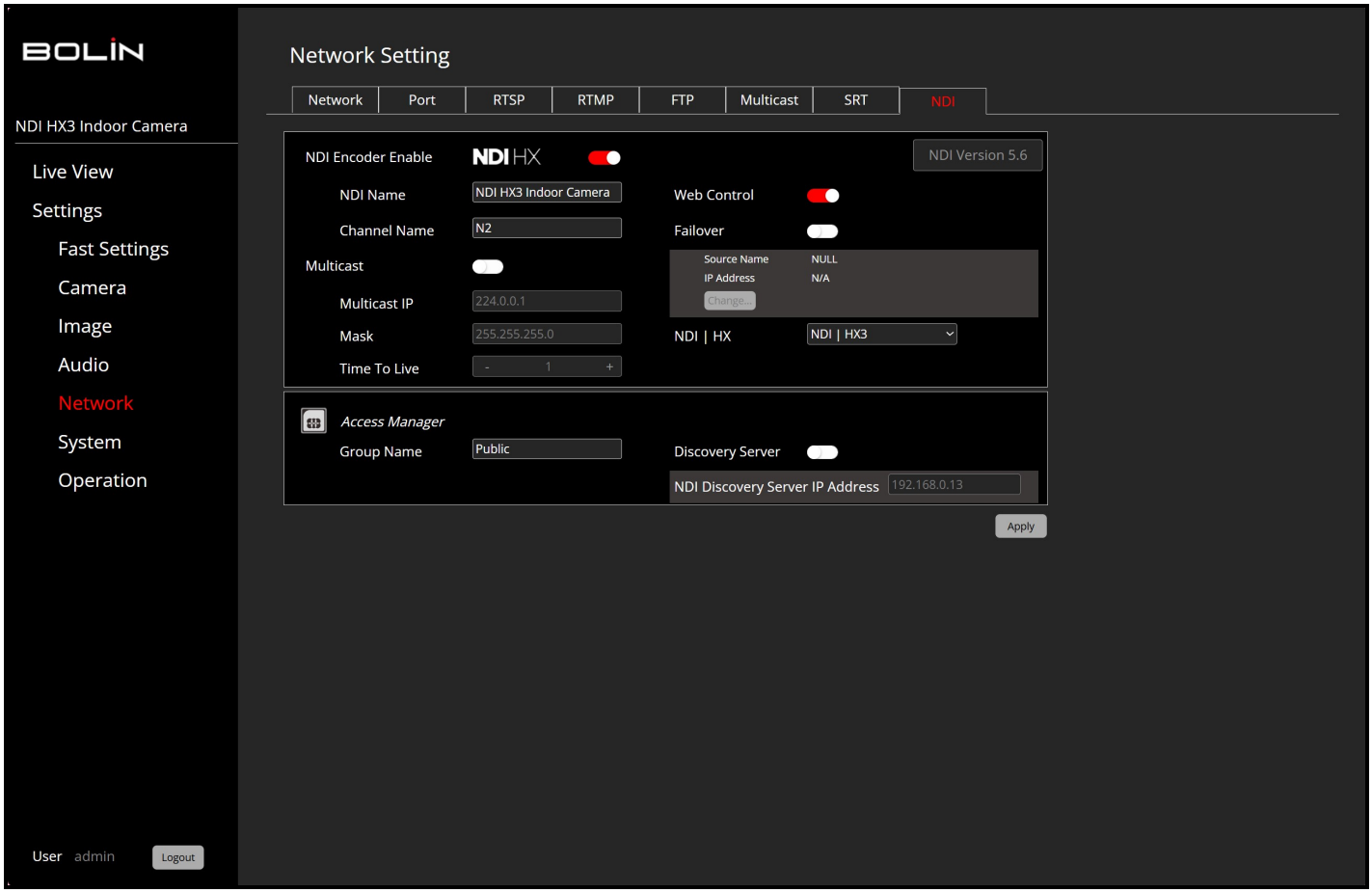

- **NDI Encoder Enable:** Enable or disable the NDI encoder. When enabled, the camera will stream video using the NDI protocol.
- **NDI Name:** Enter a name for your NDI HX3 Indoor Camera. This name will be used to identify the camera on the network.
- **Channel Name:** Enter a name for the channel. This helps in organizing multiple streams from different cameras.
- **Multicast:** Enable or disable multicast streaming. When enabled, the camera can send streams to multiple destinations.
- **Multicast IP:** Enter the multicast IP address if multicast is enabled.
- **Mask:** Enter the subnet mask for the multicast IP.
- **Time To Live:** Set the TTL value for multicast packets. This value determines the number of hops the packet can take before being discarded.
- **Web Control:** Enable or disable web control. When enabled, you can control the camera via a web interface.
- **Failover:** Enable or disable the failover function. When enabled, the camera can switch to a backup source if the primary source fails.
- **NDI | HX:** Select the NDI version for the camera. Options include NDI | HX2 and NDI | HX3.
- **Access Manager:** This section manages the access settings for the camera.
- **Group Name:** Enter the group name to control access to the camera. Default is "Public."
- **Discovery Server:** Enable or disable the discovery server. When enabled, the camera will use a discovery server to advertise its presence on the network.
- **NDI Discovery Server IP Address:** Enter the IP address of the NDI discovery server.

Tips for Configuring Your NDI HX3 Indoor Camera

- Ensure that the NDI Encoder is enabled for the camera to stream video over the network.
- Use a descriptive NDI Name and Channel Name to easily identify your camera and its stream on the network.
- Enable Web Control if you need to manage the camera remotely through a web interface.
- If using multicast, ensure your network supports it and configure the multicast IP, mask, and TTL accordingly.
- Use the failover option to provide redundancy and avoid disruptions in the video stream.
- Choose the appropriate NDI version to match your network and usage requirements.
- Set a group name to manage access control if needed.
- If you have a discovery server, enable it and enter the correct IP address to facilitate the camera's discovery on the network.

SYSTEM - **SYSTEM SETTINGS**

DEVICE

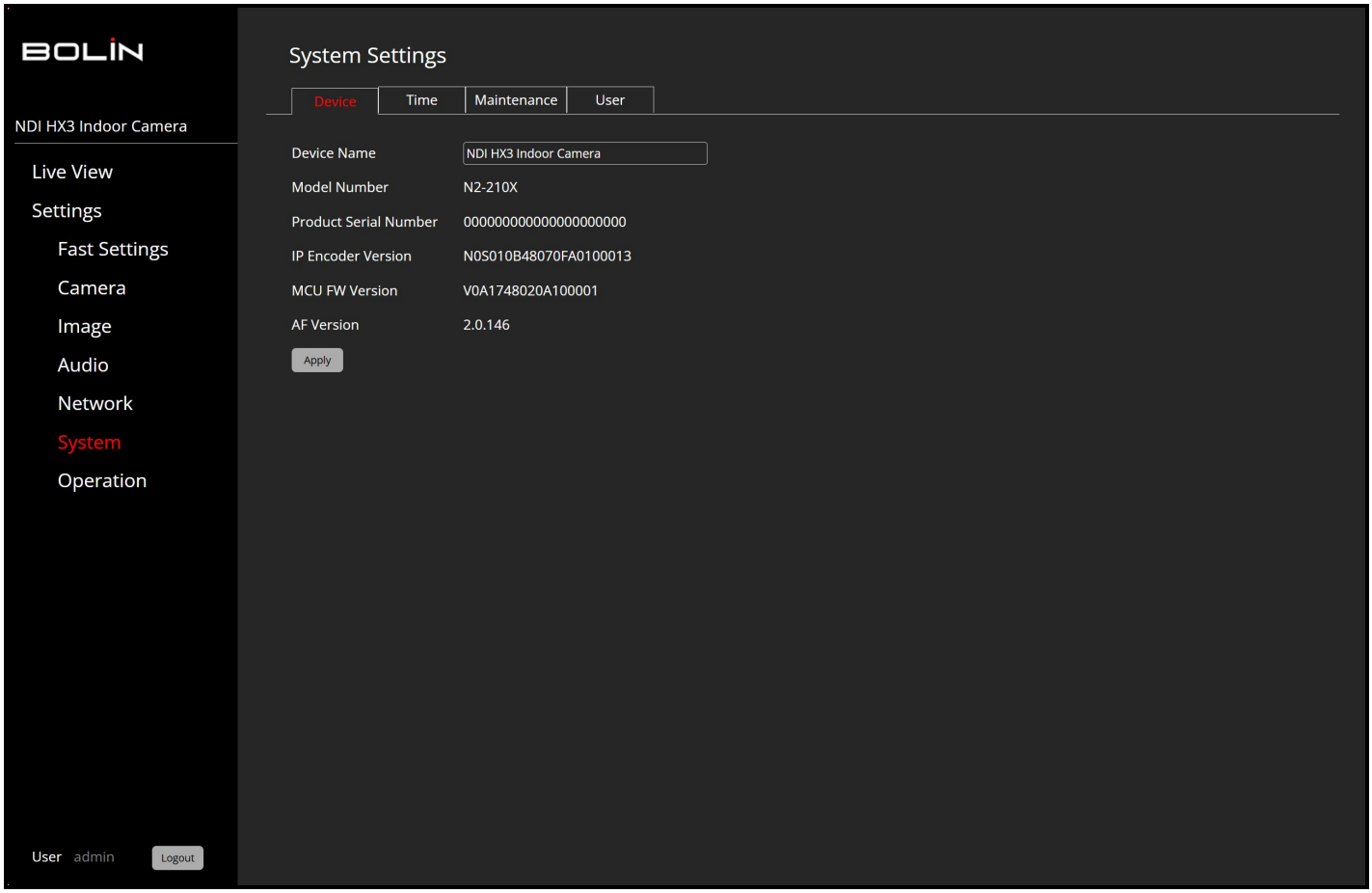

The **Device** tab provides fundamental details about the PTZ camera.

- **Device Name**: You can assign a unique name to the camera and confirm by clicking Apply.

You may need to share the information from this tab with the Bolin technical team, which includes the Model number, Serial number, IP Encoder Version, and AF Version.

TIME tab allows you to set the Date and Time of the PTZ camera.

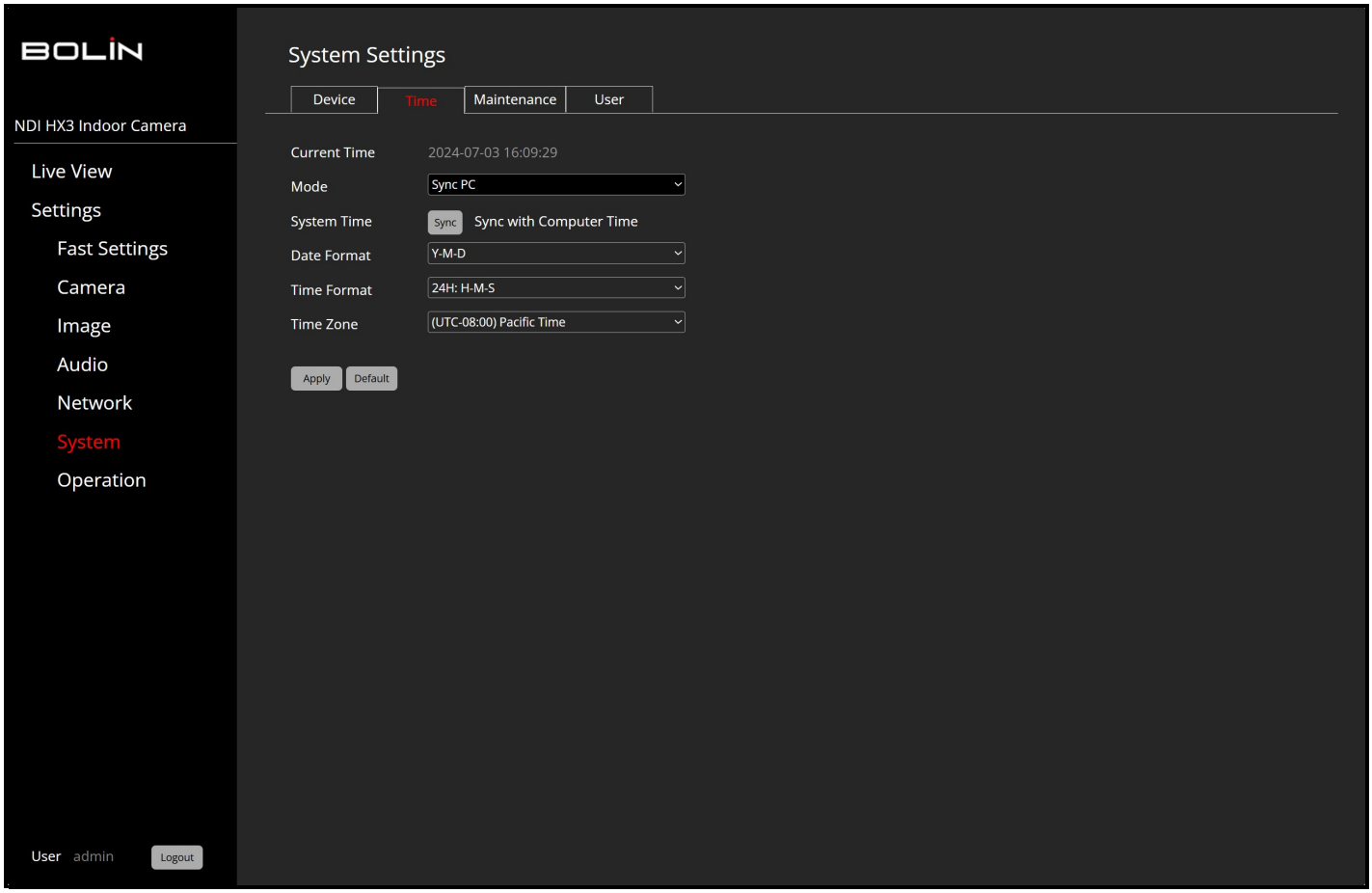

- **System Time:** You can check the Sync with Computer Time box to sync the computer time with the PTZ camera.
- **Date Format:** Y-M-D or D-M-Y
- **Time Format:** 24H or 12H
- **Time Zone:** 11 for West, one Middle and 8 for East time zones.

- **Network Time Sync:** Check this box to input the time from a Sync Server.
- **Time Sync Server:** Sync Server URL address.
- **Port:** Enter a Port number.
- **Refresh:** Select a refresh rate time:10 Min, 30 Min, 1 Hour, 1 Day.

Apply settings or click on Default to reset.

MAINTENANCE

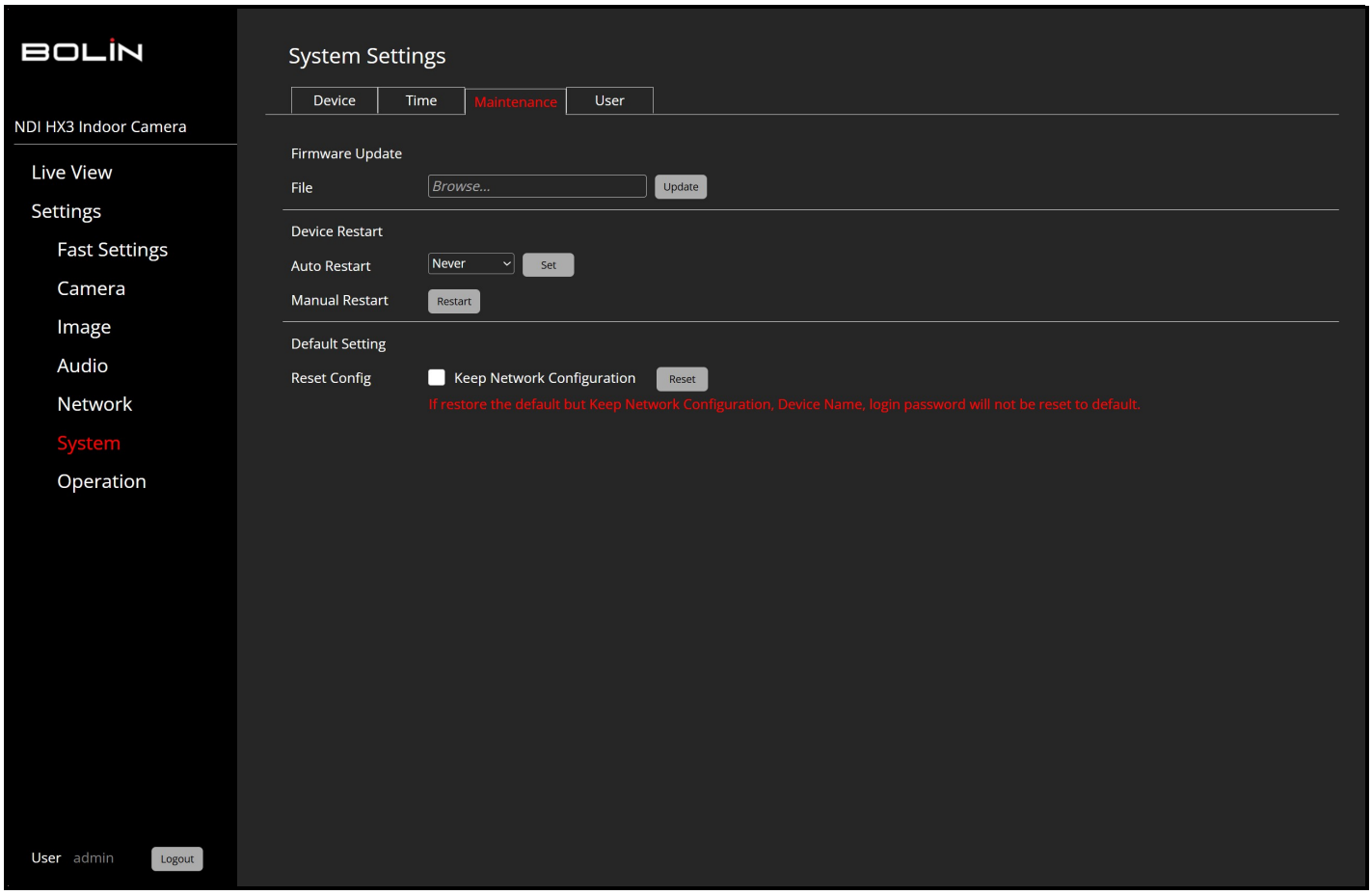

Firmware Update: Click on the File Browser section and select the Firmware file update. Click on the Update button to update the PTZ camera.
Device Restart: Schedule Auto Restart to: Never, Per day, Per week or Per month. Restart manually.
Default Settings: Check Keep Network Configuration and Reset everything else. Or, Reset all.

NOTE: Restoring the default settings won't reset the Network Configuration, Device Name, or login password.

USER

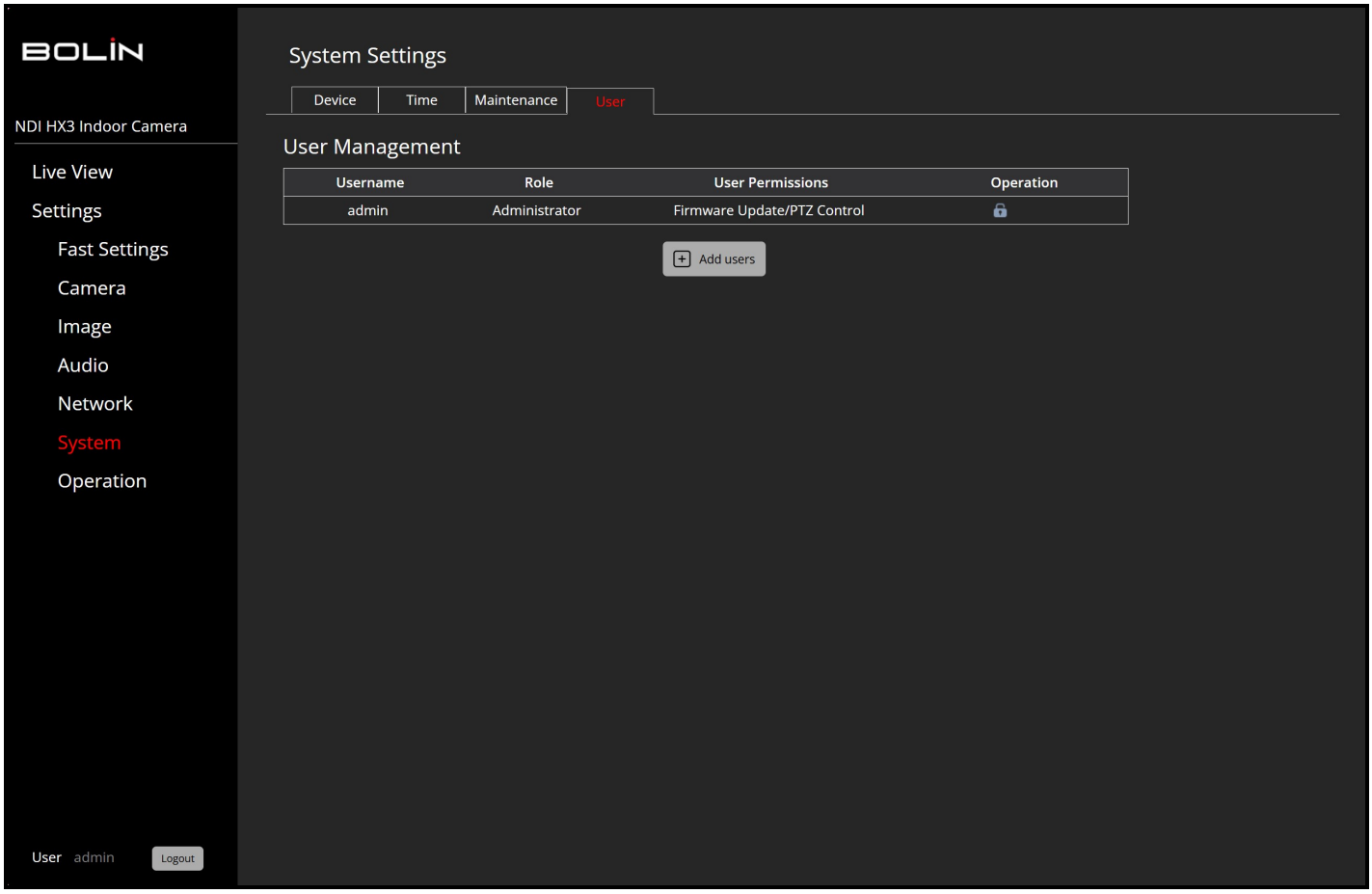

The **User** tab, located under the System section, is where you can manage operators who have access to the camera. Note that operators do not have the same level of access to system settings as administrators.

User Management:

1. The ‘Add users’ button needs to be clicked.
2. A username for the new user should be entered.
3. A role for the user should be chosen. Either an ‘Operator’, who will not have access to system settings, or ‘Administrator’, who will have access to all settings, can be selected.
4. A password for the user should be created. It is strongly recommended to use a strong password that includes at least one uppercase letter, one lowercase letter, one number, and one special character.
5. The user’s permissions should be set. ‘Software Upgrade’ and/or ‘PTZ Control’ can be selected.
6. Finally, ‘Save’ should be clicked to add the user.

OPERATION

LOG: Under the "Logs" tab, users can see the actions that are performed by the device. The log can be filtered by 'All', Information, Warnings, and Errors.

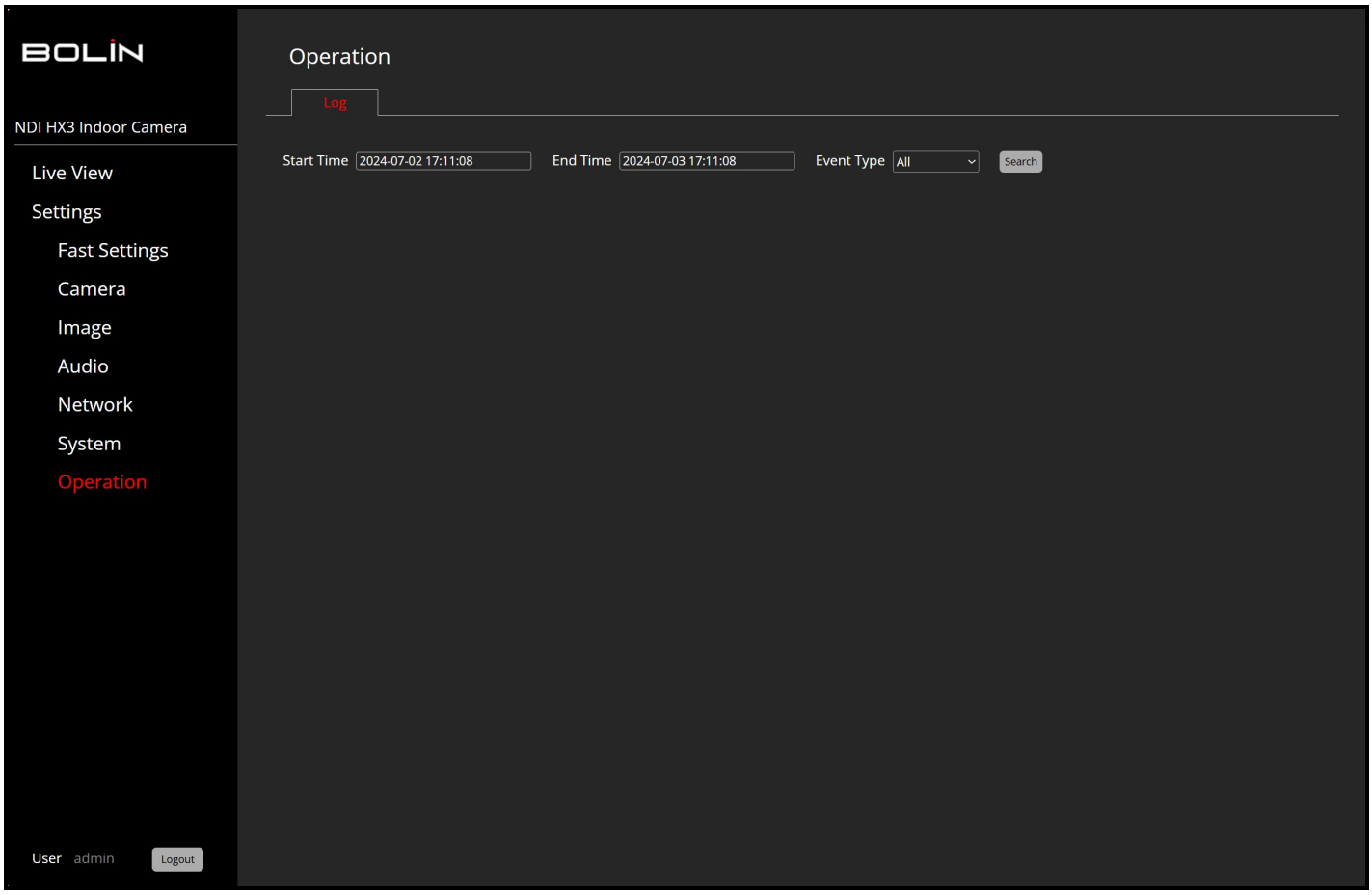
BOLIN
NDI HX3 Indoor Camera
Live View
Settings
Fast Settings
Camera
Image
Audio
Network
System
Operation
User admin
Logout
Operation
Log
Start Time 2024-07-02 17:11:08
End Time 2024-07-03 17:11:08
Event Type All
Search