yellobrik®
ODT 1510

Technical Specifications

Serial I/O	EIA/ETA RS232C / RS422 / RS485 (selectable) - RJ45 Connector
	Baud rate - Auto sense and auto adjust from 300 to 460K
	Serial setting dip switch provides settings for: • Select RS232 / RS422/485 modes • Select serial termination (for end of line) • RX/TX crossover to flip the RX and TX if needed • Set RS422/485 data direction to automatic or manual if needed
	LED status indicators (Serial TX activity + Serial RX activity)
	ESD protection for up to 26kV
GPI I/O	2× general purpose inputs (GPI) on RJ45 connector
	Passive contact closure (short-to-trigger), up to 25 Hz, 3.75 kV isolation
	2× general purpose outputs (GPO) on RJ45 connector
	Relay contact closure, up to 25 Hz, 30 V DC/VAC, 0.25A, 3.75 kV isolation
	LED status for GPI1/2 and GPO1/2 activity
Power	+12V DC @ 2W nominal - (supports 7 - 15V DC input range) 1x Power LED on side of module
Physical	Size: 140mm x 42mm x 22mm (5.51”x 1.65”x 0.86”) incl. connectors Weight: 125g (4.4oz)
Includes	Module, AC power supply, SFP depending on model

Ordering Information

Model	Mode	Type	TX Wavelength	SFP Included
ODT 1510	Single	Standard	1310nm	Yes
ODT 1510 MM	Multi	SR	850nm	Yes
ODT 1510 CW	Single	CWDM	1270 - 1610nm	No



WARNING
CLASS 1M LASER PRODUCT
LASER RADIATION

Do not view directly with optical instruments

Visit our website for the latest product updates: **www.lynx-technik.com**

yellobrik® | Quick Reference

ODT 1510
Serial RS232/422/485 & GPI to Fiber Transceiver

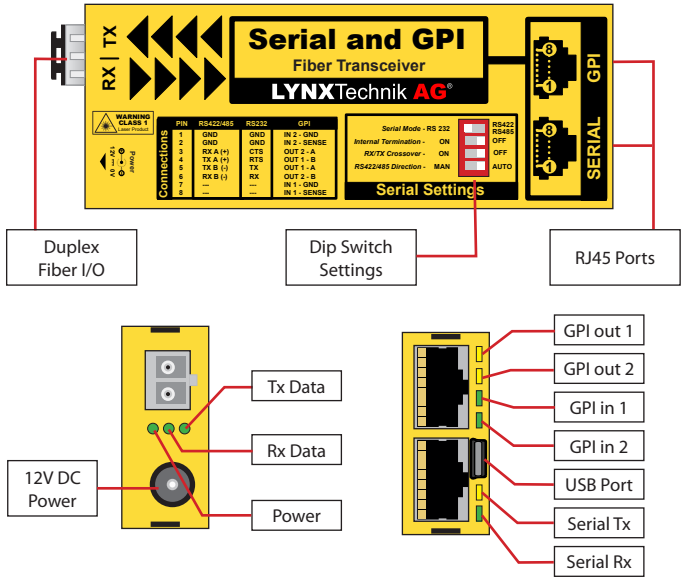

The ODT 1510 yellobrik extends a serial data communication and two GPI signals over fiber. It supports RS232, RS422, and RS485 protocols at 300–460K Baud with auto-sensing and auto-adjustment, including mixed serial standards. It is compatible with standard 1310nm single-mode, 850nm multi-mode, and CWDM SFPs.

Connections

The ODT 1510 yellobriks are designed to be used in pairs. The units support RS-232, RS-422, and RS-485 serial communication in both full-duplex and half-duplex modes. In addition, two GPI and two GPO signals are provided.

Duplex Fiber connections use LC connectors and require two fiber links. To protect the optical interface from dust and contamination, keep the supplied dust plug installed whenever the fiber connection is not in use.

A USB port is provided for firmware updates, configuration, and monitoring. Firmware updates are provided free of charge via yelloGUI and Lynx Centraal.

Settings

Serial Mode:	Chose between RS232 and RS 422/485
Internal Termination:	Set to ON if last device in line
Crossover:	Select to swap TX and RX lines
Direction:	Data direction mode. Not applicable for RS 232. Must be set to Auto for Half Duplex. GND connection is required for AUTO mode.

Module LEDs

Power LED		
	Green	Device Running
	Yellow (blinking)	"Locate Module" function active
	Red (blinking)	Hardware Issues
	Off	Device Not Powered
TX LED		
	Green	Output Signal Active
	Off	No Input Signal Detected, No Signal Transmitted (Laser Active)
RX LED		
	Green	Valid Signal Received
	Green/Red	Incompatible Input Signal
	Off	No Signal Detected

Distances

ODT 1510	Single-mode Standard 1310nm: up to 10km (12 miles)
ODT 1510 MM	Multi-mode: up to 550m (1800 feet)
ODT 1510 CW	Single-mode CWDM: up to 40/80km (25/50 miles)

GPI Connections

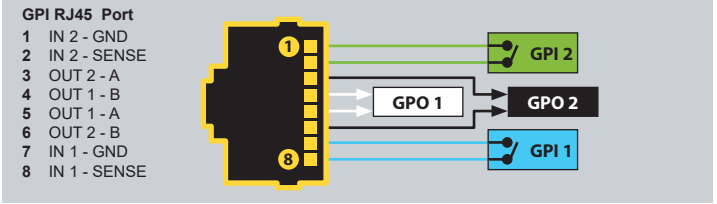

RS 232 Connections

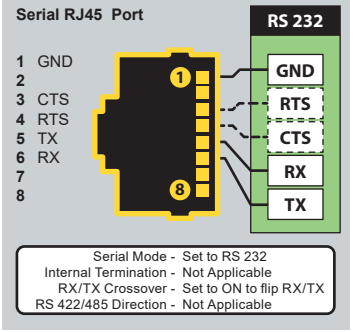

RS 422/485 Full Duplex

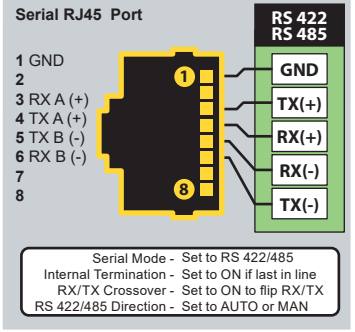

RS 485 Half Duplex

