yellobrik®

ODT 1510

LYNX | Centraal™ yelloGUI

Serial and GPI to Fiber Transceiver



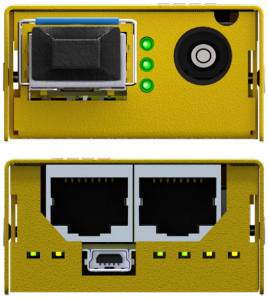

Features

- Extend serial and GPI connections up to 80km*
- Supports serial RS232 or RS422 or RS485
- 2x GPI connections
- Standard/CWDM Single-mode and Multi-mode fiber
- Compatible with 18 CWDM SFP options
- Switchable RX/TX crossover
- Automatic or manual data direction
- Switchable end of line termination
- 'Plug and Play' - No software application required
- Supports all serial protocols (standard and proprietary)

Description

The ODT 1510 module is a multifunction yellobrik that extends serial communications and two general-purpose I/O (GPI) signals over fiber.

One RJ45 port provides configurable serial communication (RS232, RS422, or RS485), while a second RJ45 port is dedicated to two electrical GPI inputs/outputs. Both serial and GPI signals are transmitted and extended over the same fiber link.

The ODT 1510 supports all standard and proprietary protocols at data rates ranging from 300 to 460K Baud (auto sensing and auto adjusting).

It can handle mixed serial standards. For example: RS232 on the transmition unit and RS422 on the receiver.

The ODT 1510 is compatible with single-mode and multi-mode SFP transceivers operating at fixed wavelength, as well as a range of 18 CWDM SFPs for use in multiplexed CWDM environment. CWDM SFPs are sold separately.

Technical Specifications

Serial I/O	EIA/ETA RS232C / RS422 / RS485 (selectable)
	Connector: RJ45
	Baud rate: Auto sense and auto adjust from 300 to 460k
	Dip switch settings for: • RS232 / RS422 / RS485 modes • Serial termination (for end of line) • RX/TX crossover to flip RX and TX • Automatic or manual data direction
	LED status for Serial TX / RX activity
	Mx number of RS422/485 electrical nodes = 25
	ESD protection for up to 26kV
GPI I/O	2x GPI Inputs on RJ45 connector: • External passive closure between pins (short) to trigger • Max input switching frequency: 25Hz (50 operations/sec) • Input insulation 3.75kV
	2x GPI Outputs on RJ45 connector: • Internal contact closure (relay) • Max switching frequency: 25Hz (50 operations/sec) • Max switching power: 30 VDC/VAC, 0.25A • Output insulation: 3.75kV
	LED status indicators for GPI Input 1&2 and GPI Output 1&2
Fiber	1x 1GbE Transceiver SFP LC Duplex Standard 1310nm, Multi-mode or CWDM
	RX and TX activity LEDs on side of module next to fiber I/O
Power	+12V DC @ 2.0W nominal - (supports 7 - 15V DC input range)
Physical	Size: 120x42x22mm (4.73"x 1.65"x 0.86") incl. connectors Weight: 125g (4.4oz)
Ambient	5 - 40ºC (41 - 104ºF) 90% Humidity (non condensing)
Includes	Module, AC power supply, SFP depending on model

Ordering Information

Model	Mode	Type	TX Wavelength	TX Power	RX Input Range	RX Sensitivity	Distance (up to)	SFP Included
ODT 1510	Single-mode	Standard	1310nm	-6dBm	1260 - 1580nm	-23dBm	10 km, 6.2 mi	Yes
ODT 1510 MM	Multi-mode	SR	850nm	-6dBm	840 - 860nm	-16dBm	550 m, 1800 ft	Yes
ODT 1510 CW	Single-mode	CWDM	1270 - 1610nm	-2dBm	1260 - 1620nm	-23dBm	40/80 km, 25/50 mi	No

Application Examples

Connection Diagrams

RS 232 Connections

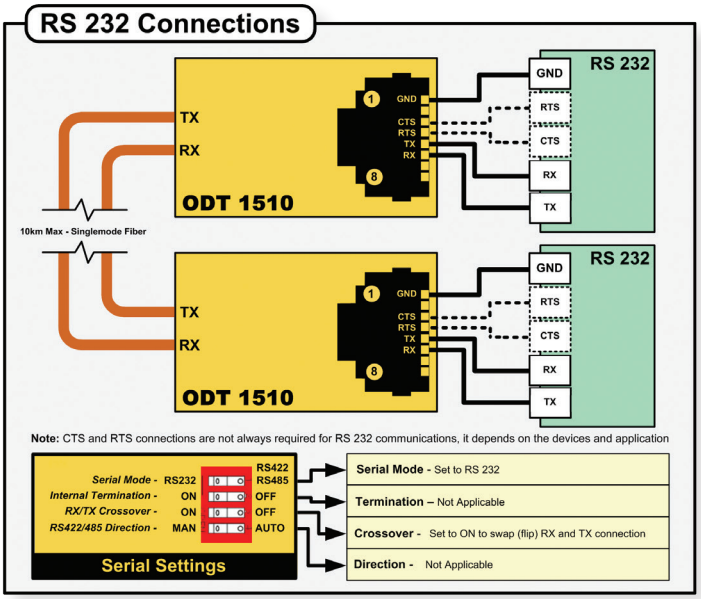

RS 422/485 Connections

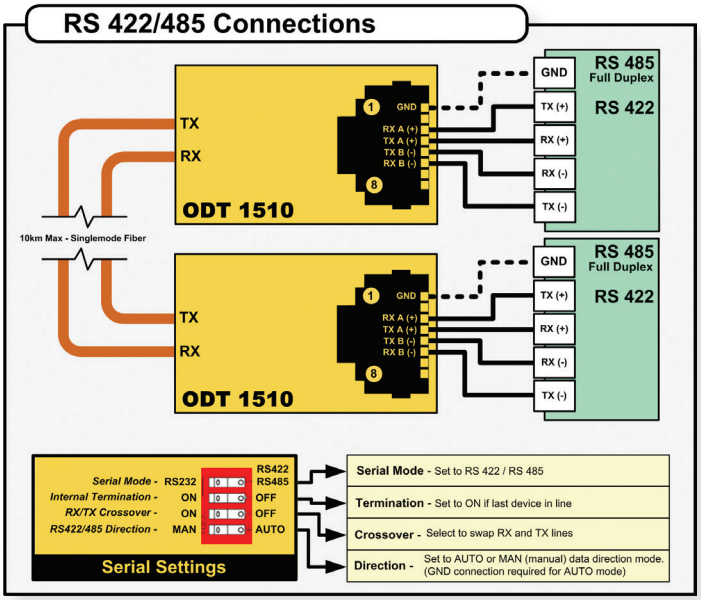

GPI Connections

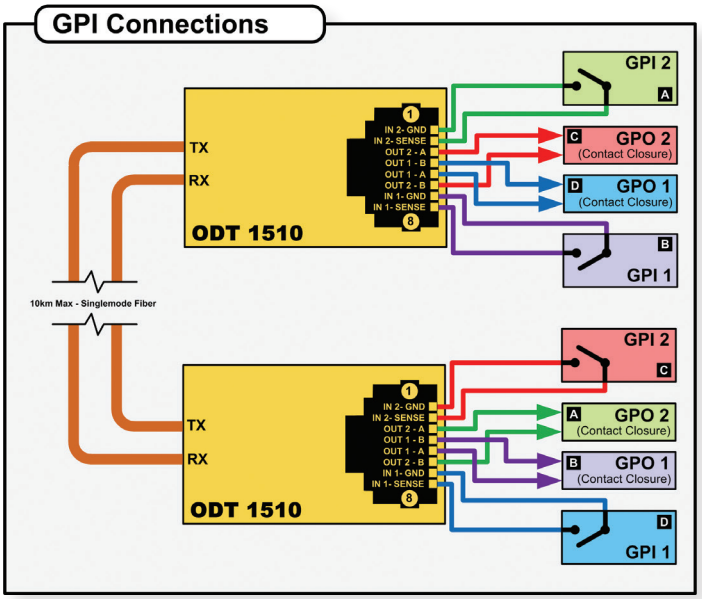

RS 485 Connections – Half Duplex

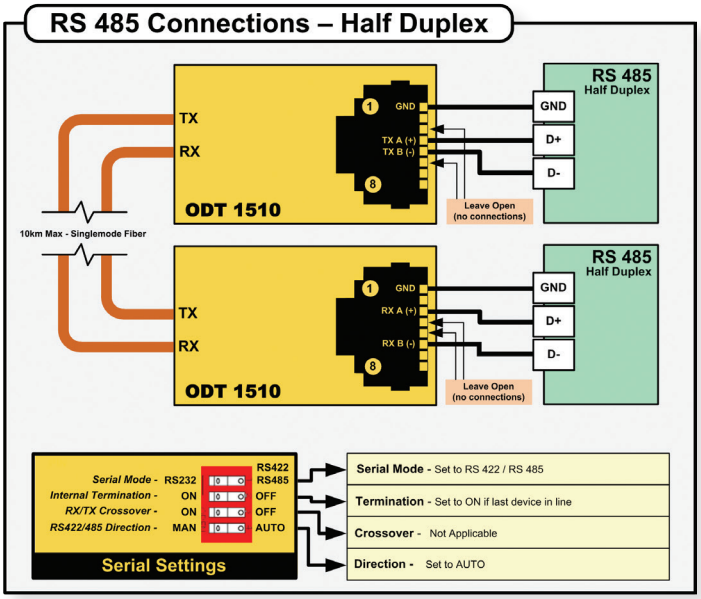

Optional Accessories

Rack Frames

This yellobrik can be placed in a rack frame along others to build increasingly complex systems, all monitored and controlled with a rack controller (RCT 1012) and server module (SRV 1000) via a PC or MAC using LynxCentraal.

The RFR 1200 offers additional power redundancy with GPI alert. It automatically closes a connection between the A and B terminals on power failure.

The RPS A100 is a 100W power supply, which can be mounted at the rear end of the RFR 1200 with an RXT 1001 power supply holder for rack frames.

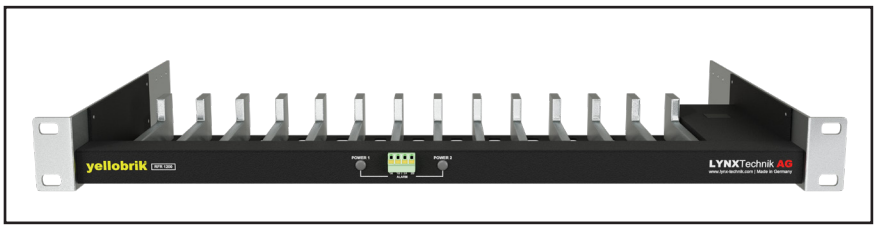

RFR 1200: yellobrik Rack Frame



RPS A100: 100W Power supply

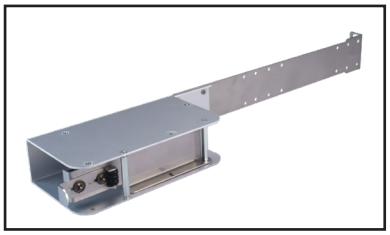

RXT 1001: Power Supply Holder

yellobrik Server Module



The yellobrik server SRV 1000 adds functions like AutoControl, CustomControl, Mass Backup & Restore and more to a yellobrik system.

These additional features can only be accessed via LynxCentraal.

yellobrik Rack Controller Module



The yellobrik Rack Controller RCT1012 is a node module to monitor and update up to 12 yellobriks centrally via ethernet instead of individual USB connections.

The module also offers four GPI interfaces to monitor the GPI output of other devices (example: the RFR 1200 power supply status).

Fiber Adapter Cables

While some of our products offer LC, ST and SC fiber connectors, most SFPs in our product range offer LC fiber connectors.

To still allow the necessary flexibility in a professional setting we offer patch cables to convert LC to ST or SC fiber connections. These patch cables' insertion less and return loss are manually checked for each individual cable to allow for maximum precision when calculating the optical budget

Besides the selection here we offer LC/FC and LC/LC patch cables.

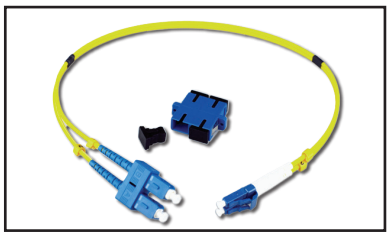

LC/SC Dup: LC/SC Duplex adapter cable

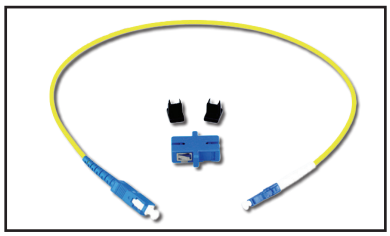

LC/SC Sim: LC/SC Simplex adapter cable

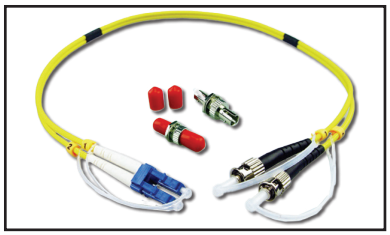

LC/ST Dup: LC/ST Duplex adapter cable

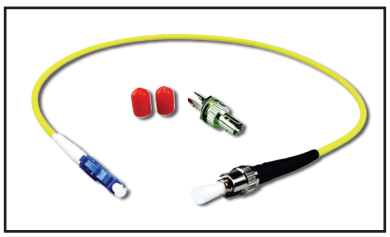

LC/ST Sim: LC/ST Simplex adapter cable