yellobrik®
OBD 1910

Technical Specifications

10GbE I/O	2x 10GbE SFP+ slots
	Supports 10GBase-T SFP, 10GBase-X, 1000Base-T
	IEEE 802.3ae
OBD 1910 E	Port 1: Bi-directionnal Simplex WDM Single-Mode Fiber SFP Port 2: RJ45 SFP
OBD 1910 MM	Port 1: Bi-directionnal Simplex WDM Single-Mode Fiber SFP Port 2: Duplex 850nm Multi-mode Fiber SFP
LED	1x Power LED, 2x Signal Presence LEDs
Power	+12V DC @ 4.7W nominal - (supports 7 - 15V DC input range)
Physical	Size: 140mm x 42mm x 22mm (5.51" x 1.65" x 0.86") incl. connectors Weight: 125g (4.4oz)
Includes	Module, AC power supply, SFP depending on model

Ordering Information

Model	Mode	Type	TX Wavelength	SFP Included
OBD 1910 E	Ethernet	RJ45	N/A	Yes
OBD 1910 MM	Multi-mode	SR	850nm	Yes

WARNING
CLASS 1M LASER PRODUCT
LASER RADIATION

Do not view directly with optical instruments

Visit our website for the latest product updates: **www.lynx-technik.com**

LYNXTechnik | Broadcast Television Equipment

yellobrik® | Quick Reference

OBD 1910
10GbE to Fiber Transceiver

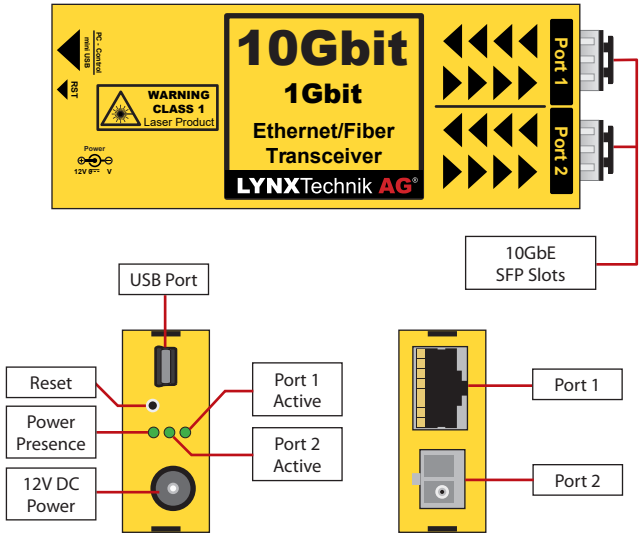

The OBD 1910 is a plug-and-play device that extends 1GbE or 10GbE signals up to 30 km over a single fiber using WDM technology. By transmitting and receiving over one simplex fiber instead of traditional duplex links, it simplifies deployment. The unit operates as a transparent pass-through and does not convert between 1GbE and 10GbE bitrates.

Connections

OBD 1910 E: RJ45 connection and Simplex (bi-directional single link fiber) WDM Single-Mode on LC connector
OBD 1910 MM: Duplex Multi-mode connection and Simplex (bi-directional single link fiber) WDM Single-mode on LC connector

To protect the optical interface from dust and contamination, keep the supplied dust plug installed whenever the fiber connection is not in use. A USB port is provided for firmware updates, configuration, and monitoring. Firmware updates are provided free of charge via yelloGUI and Lynx Centraal.

Operation

Operation is fully automatic, with data rates automatically detected and configured for 1 Gbit/s or 10 Gbit/s operation over the optical interfaces. The kit includes 2 modules with their power supplies. No advanced configuration is required. Hot-swapping and hot-plugging of SFP modules and connections are supported. No user configuration is required for normal operation.

Module LEDs

Power LED		
	Green	Device Running
	Yellow (blinkinvg)	"Locate Module" function active
	Red (blinking)	Hardware Issues
	Off	Device Not Powered
Port 1 & Port2 LED		
	Green	Valid Signal Present
	Both blinking	Both links are active and operating at the same data rate
	Off	No Signal Present

Distances

The bi-directionnal fiber link can extend up to 30 km or 18 miles.

Power

The module requires a 12V DC power input. The LED indicates when power is connected. If using an external power supply, a clean 7–15V DC source is required.
The OBD 1910 has a power consumption of 4.7W (including SFP).

Power Lead Strain Relief

Yellobrik modules have a small hole above the power connection to prevent the power lead from being accidentally pulled out. Secure the lead using the supplied tie-wrap as shown below.

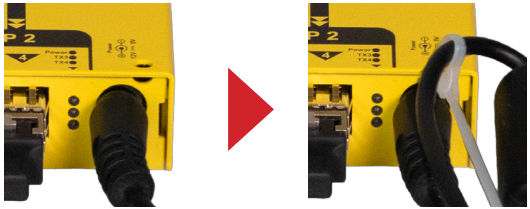

Optional Mounting Solutions

The optional RFR 1001 mounting bracket allows the module to be installed on any surface and 19'' rack rails.



The RFR 1200 rack frame can hold up to 14 yellobriks and can provide power redundancy for all installed devices.

